BLOCK 14 LOT 7
CONSERV ESMT PT OR 929/824
SPRING LAKE EST 4 REPLAT

CHAVEZ SALAZAR JOSE A/WILLIAMS ABIGAIL MARIE
55174 FOX SQUIRREL DRIVE
CALLAHAN, FL 32011

2025

46-2N-25-197D-0014-0070

NASSAU COUNTY PROPERTY

BUILDING CHARACTERISTICS

ELEMENT	CD	CONSTRUCTION
Exterior Wall	16	WD FR STUC 50
Exterior Wall	17	CB STUCCO 50
Roof Structur	03	GABLE/HIP 100
Roof Cover	03	COMP SHNGL 100
Interior Wall	05	DRYWALL 100
Interior Floo	13	LVT/LAMNT 50
Interior Floo	14	CARPET 50
Air Condition	03	CENTRAL 100
Heating Type	04	AIR DUCTED 100
Bedrooms		4 100
Bathrooms		3.5 100
Frame	02	WOOD FRAME 100
Stories	2.	2. 100
Units		0 100
Occupancy	00	NONE 100
Quality	03	Quality Level 03
DOR CODE	0100	SINGLE FAMILY
MAP NUM		MKT AREA 08
NEIGHBORHOOD/LOC	8010.00	

AREA TYPE	TOTAL GROSS AREA	PCT OF BASE	YEAR	TOT ADJ AREA	SUBAREA MARKET VALUE
BAS	1,364	100	2004	1,364	165,967
FGR	396	55	2004	218	26,526
FOP	16	30	2004	5	608
FUS	1,632	100	2004	1,632	198,576
PTO	180	5	2004	9	1,095
TOTALS	3,588			3,228	392,772

MARKET ADJUSTMENTS

TYPE	MDL	EFF. AREA	TOT ADJ PTS	EFF. BASE RATE	REPL. COST NEW	AYB	EYB	ECON	FNCT		NORM	% COND
0900	01	3,228	100.7400	132.98	429,259	2004	2007	0	0	0	8.50	91.50

1 SNGL FAM – 100% - 2024 Heated Area: 2996 HX Base Yr 2024

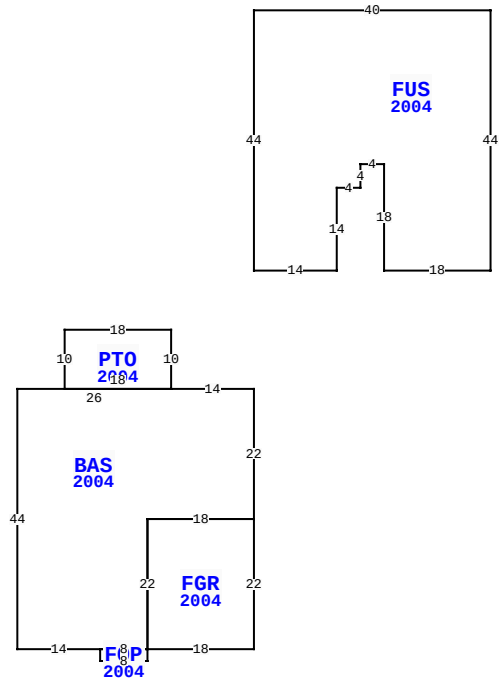

55174 FOX SQUIRREL DR, CALLAHAN

BLD DATE		LGL DATE	
XF DATE		LAND DATE	04/04/2024 MLU
INC DATE		AG DATE	

NASSAU COUNTY PROPERTY — VALUATION SUMMARY

VALUATION BY		STANDARD
Tax Group: 6	Tax Dist:	
BUILDING MARKET VALUE		402,484
TOTAL MARKET OB/XF VALUE		9,351
TOTAL LAND VALUE - MARKET		55,000
TOTAL MARKET VALUE		466,835
SOH/AGL Deduction		84,778
ASSESSED VALUE		382,057
TOTAL EXEMPTION VALUE	HX HB	50,722
BASE TAXABLE VALUE		331,335
TOTAL JUST VALUE		466,835
NCON VALUE		0
INCOME VALUE		
PREVIOUS YEAR MKT VALUE		447,801

PERMIT NUM	DESCRIPTION	AMT	ISSUED
19006750	XFOB	25,339	08/01/2019
17007425	REPAIR/RRF	5,000	11/01/2017
B23525	ADDITION	8,096	04/01/2010
B23065	XFOB	400	11/01/2009
B12744	NEW CONSTR	211,690	05/01/2004
R6110	REPAIR/RRF	8,000	05/01/2004

SALES DATA

OFF RECORD Number	DATE	TYPE INST	Q U /	V I /	RSN CD	SALE PRICE
2574/0407	6/24/2022	WD	Q	I	01	490,000
GRANTOR: WALTERS LJ & NANCY						
GRANTEE: SALAZAR CHAVEZ & AB						
1862/0183	6/11/2013	WD	Q	I	02	200,000
GRANTOR: LUADTKE RAYMOND JOHN						
GRANTEE: WALTERS LJ & NANCY						

BUILDING NOTES

BUILDING DIMENSIONS

BAS=[YR=2004] W14 PTO=[YR=2004] N10 W18 S10 E18$ W26 S44 E14 FOP=[YR=2004] S2 E8 N2 W8$ E8 FGR=[YR=2004] E18 N22 W18 S22$ N22 E18 N22$ PTR= N20 FUS=[YR=2004] N44 E40 S44 W18 N18 W4 S4 W4 S14 W14$ S20$.

EXTRA FEATURES

LN	OB/XF CODE	DESCRIPTION	BLD	CAP	L	W	UNITS	UT	Adj R	ADJ UNIT PRICE	ORIG COND	YEAR ON	YEAR ACTUAL	Q	% COND	OB/XF MKT VALUE	NOTES
1	0812	CONCRETE C	0	100	0	0	1,164.00	SF	4.00	4.00	100	2004	2004	3	83	3,864	
2	1076	TRELLIS A	0	100	0	0	327.00	SF	7.50	7.50	100	2010	2010	3	56	1,373	
3	0830	FLAGSTONE	0	100	0	0	102.00	SF	12.00	12.00	100	2010	2010	3	90	1,102	
4	0810	CONCRETE A	0	100	0	0	208.00	SF	6.50	6.50	100	2010	2010	3	90	1,217	
5	0476	VF 6 SBPL	0	100	0	0	66.00	LF	32.00	32.00	100	2014	2014	3	85	1,795	

LAND DESCRIPTION

TOTAL OB/XF 9,351

LN	USE CODE	CLS	LAND USE DESCRIPTION	CAP	RD	LOC ZONE	FRONT	DEPTH	TOT LND UTS	UNIT TYPE	DT	DPTH FACT	% COND	TOT ADJ	UNIT PRICE	ADJ UNIT PRICE	LAND VALUE	OTHER ADJUSTMENTS AND NOTES	YEAR	DENSITY	DECL	FRZ	YR	CONSRV
1	000100	C	RES	100	0006	RSF-1	0.00	0.00	1.00	LT		1.00	1.00	1.00	55,000.00	55,000.00	55,000							

REVIEW DATE 06/10/2020 BY KBA Total Acres: 0.00 Total Land Value: 55,000 Market: 0 Agricultural: 0 Common: 55,000 PRINTED 07/30/2025 BY SYS

BLOCK 14 LOT 7
CONSERV ESMT PT OR 929/824
SPRING LAKE EST 4 REPLAT

CHAVEZ SALAZAR JOSE A/WILLIAMS ABIGAIL MARIE
55174 FOX SQUIRREL DRIVE
CALLAHAN, FL 32011

2025

46-2N-25-197D-0014-0070

NASSAU COUNTY PROPERTY

BUILDING CHARACTERISTICS

ELEMENT	CD	CONSTRUCTION
Exterior Wall	25	MOD METAL 100
Roof Structur	03	GABLE/HIP 100
Roof Cover	12	MODULAR MT 100
Interior Wall	07	NONE 100
Interior Floo	03	CONC FINSH 100
Air Condition	01	NONE 100
Heating Type	01	NONE 100
Bedrooms		0 100
Bathrooms		0 100
Frame	05	STEEL 100
Stories	1.	1. 100
Units		0 100
Occupancy	00	NONE 100
Quality	04	Quality Level 04

DOR CODE 0100 SINGLE FAMILY
MAP NUM | MKT AREA 08
NEIGHBORHOOD/LOC 8010.00

AREA TYPE	TOTAL GROSS AREA	PCT OF BASE	YEAR	TOT ADJ AREA	SUBAREA MARKET VALUE
BAS	520	100	2019	520	9,712
TOTALS	520			520	9,712

MARKET ADJUSTMENTS

TYPE	MDL	EFF. AREA	TOT ADJ PTS	EFF. BASE RATE	REPL. COST NEW	AYB	EYB	ECON	FNCT		NORM	% COND
6500	01	520	53.1300	19.66	10,223	2019	2019	0	0	0	5.00	95.00

2 GARAGE RES – 100% - 2024 Heated Area: 520 HX Base Yr 2024

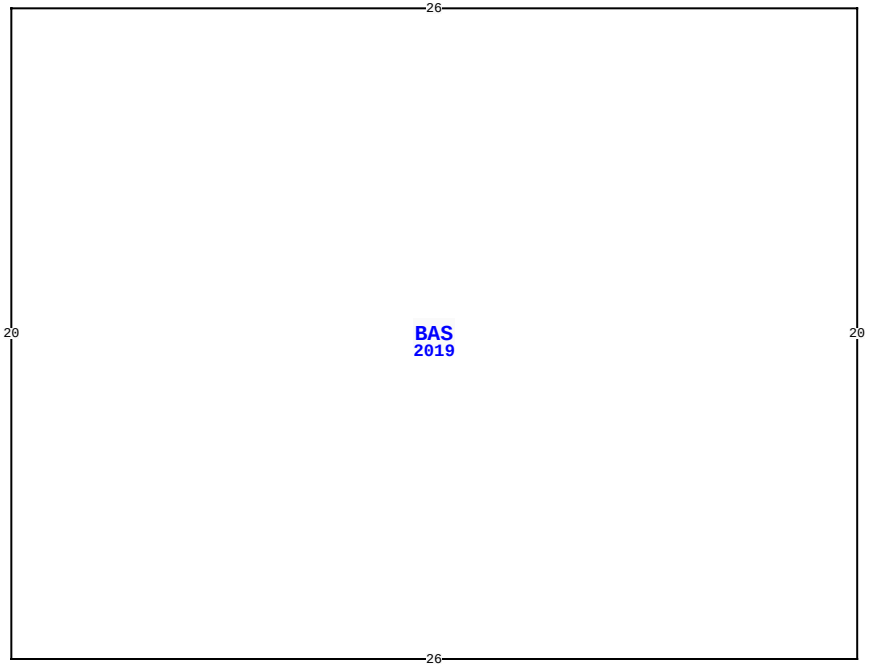

55174 FOX SQUIRREL DR, CALLAHAN

BLD DATE		LGL DATE	
XF DATE		LAND DATE	04/04/2024 MLU
INC DATE		AG DATE	

VALUATION SUMMARY

VALUATION BY		STANDARD
Tax Group: 6	Tax Dist:	
BUILDING MARKET VALUE		402,484
TOTAL MARKET OB/XF VALUE		9,351
TOTAL LAND VALUE - MARKET		55,000
TOTAL MARKET VALUE		466,835
SOH/AGL Deduction		84,778
ASSESSED VALUE		382,057
TOTAL EXEMPTION VALUE	HX HB	50,722
BASE TAXABLE VALUE		331,335
TOTAL JUST VALUE		466,835
NCON VALUE		0
INCOME VALUE		
PREVIOUS YEAR MKT VALUE		447,801

PERMIT NUM	DESCRIPTION	AMT	ISSUED

SALES DATA

OFF RECORD Number	DATE	TYPE INST	Q / U	V / I	RSN CD	SALE PRICE
2574/0407	6/24/2022	WD	Q	I	01	490,000
GRANTOR: WALTERS LJ & NANCY						
GRANTEE: SALAZAR CHAVEZ & AB						
1862/0183	6/11/2013	WD	Q	I	02	200,000
GRANTOR: LUADTKE RAYMOND JOHN						
GRANTEE: WALTERS LJ & NANCY						

BUILDING NOTES

BUILDING DIMENSIONS

BAS=[YR=2019] W26 S20 E26 N20$.

EXTRA FEATURES

L N	OB/XF CODE	DESCRIPTION	BLD	CAP	L	W	UNITS	UT	Adj R	ADJ UNIT PRICE	ORIG COND	YEAR ON	YEAR ACTUAL	Q	% COND	OB/XF MKT VALUE	NOTES

LAND DESCRIPTION

TOTAL OB/XF 0

L N	USE CODE	CLS	LAND USE DESCRIPTION	CAP	R D	LOC ZONE	FRONT	DEPTH	TOT LND UTS	UNIT TYPE	D T	DPTH FACT	% COND	TOT ADJ	UNIT PRICE	ADJ UNIT PRICE	LAND VALUE	OTHER ADJUSTMENTS AND NOTES	YEAR	DENSITY	DECL	FRZ	YR	CONSRV

REVIEW DATE 06/10/2020 BY KBA Total Acres: 0.00 Total Land Value: 55,000 Market: 0 Agricultural: 0 Common: 55,000 PRINTED 07/30/2025 BY SYS