BLOCK 14 LOT 6
IN OR 1298/764
CONSERV ESMT PT OR 929/824

MAKS GLENN
55144 FOX SQUIRREL DRIVE
CALLAHAN, FL 32011

2025

46-2N-25-197D-0014-0060

BUILDING CHARACTERISTICS

ELEMENT	CD	CONSTRUCTION
Exterior Wall	16	WD FR STUC 50
Exterior Wall	17	CB STUCCO 50
Roof Structur	03	GABLE/HIP 100
Roof Cover	03	COMP SHNGL 100
Interior Wall	05	DRYWALL 100
Interior Floo	14	CARPET 70
Interior Floo	08	SHT VINYL 30
Air Condition	03	CENTRAL 100
Heating Type	04	AIR DUCTED 100
Bedrooms		4 100
Bathrooms		2.5 100
Frame	02	WOOD FRAME 100
Stories	2.	2. 100
Units		0 100
Occupancy	00	NONE 100
Quality	03	Quality Level 03
DOR CODE	0100	SINGLE FAMILY
MAP NUM		MKT AREA 08
NEIGHBORHOOD/LOC	8010.00	

AREA TYPE	TOTAL GROSS AREA	PCT OF BASE	YEAR	TOT ADJ AREA	SUBAREA MARKET VALUE
BAS	1,256	100	2005	1,256	154,838
FGR	440	55	2005	242	29,833
FOP	12	30	2005	4	493
FOP	180	30	2023	54	6,657
FUS	1,120	100	2005	1,120	138,072
TOTALS	3,008			2,676	329,895

MARKET ADJUSTMENTS

TYPE	MDL	EFF. AREA	TOT ADJ PTS	EFF. BASE RATE	REPL. COST NEW	AYB	EYB	ECON	FNCT		NORM	% COND
0900	01	2,676	103.2000	136.22	364,525	2005	2005	0	0	0	9.50	90.50

1 SNGL FAM – 100% - 2006 Heated Area: 2376 HX Base Yr 2006

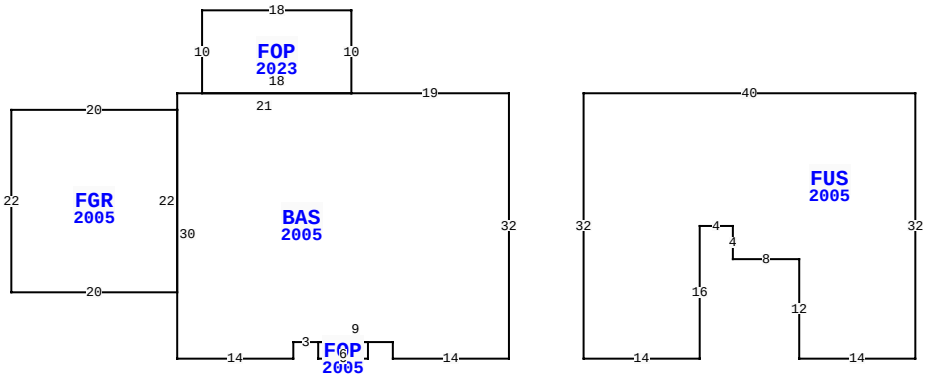

55144 FOX SQUIRREL DR, CALLAHAN

BLD DATE		LGL DATE	
XF DATE		LAND DATE	04/04/2024 MLU
INC DATE		AG DATE	

NASSAU COUNTY PROPERTY

PAGE 1 of 1 6

VALUATION SUMMARY

VALUATION BY		STANDARD
Tax Group: 6	Tax Dist:	
BUILDING MARKET VALUE		329,895
TOTAL MARKET OB/XF VALUE		4,281
TOTAL LAND VALUE - MARKET		55,000
TOTAL MARKET VALUE		389,176
SOH/AGL Deduction		209,678
ASSESSED VALUE		179,498
TOTAL EXEMPTION VALUE	HX HB	50,722
BASE TAXABLE VALUE		128,776
TOTAL JUST VALUE		389,176
NCON VALUE		0
INCOME VALUE		
PREVIOUS YEAR MKT VALUE		373,519

PERMIT NUM	DESCRIPTION	AMT	ISSUED
B13512	NEW CONSTR	169,092	08/01/2004
R6592	REPAIR/RRF	8,000	08/01/2004

SALES DATA

OFF RECORD Number	DATE	TYPE INST	Q U	V I	RSN CD	SALE PRICE
1298/0764	2/28/2005	WD	Q	I		186,300
GRANTOR: MARONDA HOMES INC						
GRANTEE: MAKS GLENN						
1215/0765	3/15/2004	WD	U	V	19	319,000
GRANTOR: BKS INC						
GRANTEE: MARONDA HOMES INC						

BUILDING NOTES

BUILDING DIMENSIONS

BAS=[YR=2005;ORIG=0,0] W19 W21 S2 S30 E14 N2 E3 E9 S2 E14 N32 $
FUS=[YR=2005;ORIG=9,32] N32 E40 S32 W14 N12 W8 N4 W4 S16 W14 $
FGR=[YR=2005;ORIG=-40,2] W20 S22 E20 N22 $
FOP=[YR=2023;ORIG=-19,0] N10 W18 S10 E18 $
FOP=[YR=2005;ORIG=-23,30] S2 E6 N2 W6 $
PTR=[ORIG=0,0] N15 S15 $
.

EXTRA FEATURES

LN	OB/XF CODE	DESCRIPTION	BLD	CAP	L	W	UNITS	UT	Adj R	ADJ UNIT PRICE	ORIG COND	YEAR ON	YEAR ACTUAL	Q	% COND	OB/XF MKT VALUE	NOTES
1	0812	CONCRETE C	0	100	0	0	1,274.00	SF	4.00	4.00	100	2005	2005	3	84	4,281	

LAND DESCRIPTION

TOTAL OB/XF 4,281

LN	USE CODE	CLS	LAND USE DESCRIPTION	CAP	RD	LOC ZONE	FRONT	DEPTH	TOT LND UTS	UNIT TYPE	DT	DPTH FACT	% COND	TOT ADJ	UNIT PRICE	ADJ UNIT PRICE	LAND VALUE	OTHER ADJUSTMENTS AND NOTES	YEAR	DENSITY	DECL	FRZ	YR	CONSRV
1	000100	C	RES	100	0006	RSF-1	0.00	0.00	1.00	LT		1.00	1.00	1.00	55,000.00	55,000.00	55,000							

REVIEW DATE 01/31/2024 BY KBA Total Acres: 0.00 Total Land Value: 55,000 Market: 0 Agricultural: 0 Common: 55,000 PRINTED 07/30/2025 BY SYS