BLOCK 4 LOT 8
IN OR 691 PG 1113
SPRING LAKE EST #1 PB 5/183

SKELTON MAURICE E JR & ELENA F
55133 DEER RUN ROAD
CALLAHAN, FL 32011

2025

46-2N-25-197A-0004-0080

NASSAU COUNTY PROPERTY

BUILDING CHARACTERISTICS

ELEMENT	CD	CONSTRUCTION
Exterior Wall	20	FACE BRICK 100
Roof Structur	03	GABLE/HIP 100
Roof Cover	03	COMP SHNGL 100
Interior Wall	05	DRYWALL 100
Interior Floo	11	CLAY TILE 50
Interior Floo	13	LVT/LAMNT 50
Air Condition	03	CENTRAL 100
Heating Type	04	AIR DUCTED 100
Bedrooms		3 100
Bathrooms		3 100
Frame	02	WOOD FRAME 100
Stories	1.5	1.5 100
Units		0 100
Occupancy	00	NONE 100
Quality	03	Quality Level 03

DOR CODE 0100 SINGLE FAMILY
MAP NUM | MKT AREA 08
NEIGHBORHOOD/LOC 8010.00

AREA TYPE	TOTAL GROSS AREA	PCT OF BASE	YEAR	TOT ADJ AREA	SUBAREA MARKET VALUE
BAS	2,499	100	2004	2,499	288,948
FGR	951	55	2004	523	60,472
FOP	280	30	2004	84	9,713
FOP	322	30	2004	97	11,216
FUS	618	100	2004	618	71,457
PTO	18	5	2004	1	116
PTO	432	5	2004	22	2,544
TOTALS	5,120			3,844	444,464

MARKET ADJUSTMENTS

TYPE	MDL	EFF. AREA	TOT ADJ PTS	EFF. BASE RATE	REPL. COST NEW	AYB	EYB	ECON	FNCT		NORM	% COND
0900	01	3,844	103.0500	136.03	522,899	2004	2004	0	0	0	15.00	85.00

1 SNGL FAM – 100% - 2005 Heated Area: 3117 HX Base Yr 2005

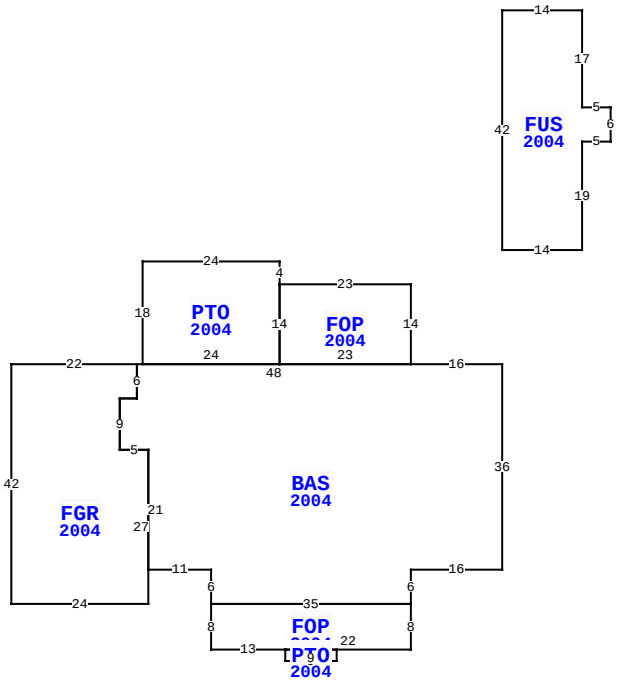

55133 DEER RUN RD, CALLAHAN

BLD DATE		LGL DATE	
XF DATE		LAND DATE	04/04/2024 MLU
INC DATE		AG DATE	

VALUATION SUMMARY

VALUATION BY		STANDARD
Tax Group: 6	Tax Dist:	
BUILDING MARKET VALUE		462,006
TOTAL MARKET OB/XF VALUE		28,071
TOTAL LAND VALUE - MARKET		55,000
TOTAL MARKET VALUE		545,077
SOH/AGL Deduction		259,131
ASSESSED VALUE		285,946
TOTAL EXEMPTION VALUE	HX HB	50,722
BASE TAXABLE VALUE		235,224
TOTAL JUST VALUE		545,077
NCON VALUE		0
INCOME VALUE		
PREVIOUS YEAR MKT VALUE		515,606

PERMIT NUM	DESCRIPTION	AMT	ISSUED
21011207	GARAGE	43,075	08/24/2021
E10136	NEW CONSTR	0	09/01/2002
M6289	H/AC	0	09/01/2002
M5686	H/AC	0	02/01/2002
B0107841	NEW CONSTR	155,050	01/01/2002

SALES DATA

OFF RECORD Number	DATE	TYPE INST	Q U	V I	RSN CD	SALE PRICE
0691/1113	11/02/1993	WD	Q	V		17,000

GRANTOR: HURST LOYD & BARBARA
GRANTEE: SKELTON MAURICE JR

0590/1268	2/20/1990	WD	Q	V		14,500

GRANTOR: SPRING LAKE ESTATES
GRANTEE: HURST LOYD & BARBAR

BUILDING NOTES

BUILDING DIMENSIONS

BAS=[YR=2004] W16 FOP=[YR=2004] N14 W23 PTO=[YR=2004] N4 W24 S18 E24 N14$ S14 E23$ W48 FGR=[YR=2004] W22 S42 E24 N27 W5 N9 E3 N6$ S6 W3 S9 E5 S21 E11 S6 FOP=[YR=2004] S8 E13 PTO=[YR=2004] S2 E9 N2 W9$ E22 N8 W35$ E35 N6 E16 N36$ PTR=N20 FUS=[YR=2004] N42 E14 S17 E5 S6 W5 S19 W14$ S20$.

EXTRA FEATURES

LN	OB/XF CODE	DESCRIPTION	BLD	CAP	L	W	UNITS	UT	Adj R	ADJ UNIT PRICE	ORIG COND	YEAR ON	YEAR ACTUAL	Q	% COND	OB/XF MKT VALUE	NOTES
1	0504	FP-ELECTRI	0	100	0	0	1.00	UT	2,000.00	2,000.00	100	2004	2004	3	87	1,740	
2	0812	CONCRETE C	0	100	0	0	3,932.00	SF	4.00	4.00	100	2004	2004	3	83	13,054	
3	0812	CONCRETE C	0	100	0	0	1,080.00	SF	4.00	4.00	100	2021	2021	3	99	4,277	
4	0681	POLE SHED	0	100	32	12	384.00	SF	15.00	15.00	100	2025	2022		95	5,472	
5	0681	POLE SHED	0	100	20	12	240.00	SF	15.00	15.00	100	2025	2023		98	3,528	

LAND DESCRIPTION

TOTAL OB/XF 28,071

LN	USE CODE	CLS	LAND USE DESCRIPTION	CAP	RD	LOC ZONE	FRONT	DEPTH	TOT LND UTS	UNIT TYPE	DT	DPTH FACT	% COND	TOT ADJ	UNIT PRICE	ADJ UNIT PRICE	LAND VALUE	OTHER ADJUSTMENTS AND NOTES	YEAR	DENSITY	DECL	FRZ	YR	CONSRV
1	000100	C	RES	100	0006	RSF-1	0.00	0.00	1.00	LT		1.00	1.00	1.00	55,000.00	55,000.00	55,000							

REVIEW DATE 06/14/2022 BY TW Total Acres: 0.00 Total Land Value: 55,000 Market: 0 Agricultural: 0 Common: 55,000 PRINTED 07/30/2025 BY SYS

BLOCK 4 LOT 8
IN OR 691 PG 1113
SPRING LAKE EST #1 PB 5/183

SKELTON MAURICE E JR & ELENA F
55133 DEER RUN ROAD
CALLAHAN, FL 32011

2025

46-2N-25-197A-0004-0080

NASSAU COUNTY PROPERTY

BUILDING CHARACTERISTICS

ELEMENT	CD	CONSTRUCTION
Exterior Wall	25	MOD METAL 100
Roof Structur	03	GABLE/HIP 100
Roof Cover	12	MODULAR MT 100
Interior Wall		N/A 100
Interior Floo	03	CONC FINSH 100
Air Condition	99	N/A 100
Heating Type		N/A 100
Bedrooms		0 100
Bathrooms		0 100
Frame	05	STEEL 100
Stories	0	0 100
Units		0 100
Occupancy	00	NONE 100
Quality	06	Quality Level 06
DOR CODE	0100	SINGLE FAMILY
MAP NUM		MKT AREA 08
NEIGHBORHOOD/LOC	8010.00	

AREA TYPE	TOTAL GROSS AREA	PCT OF BASE	YEAR	TOT ADJ AREA	SUBAREA MARKET VALUE
BAS	840	100	2021	840	17,542
TOTALS	840			840	17,542

MARKET ADJUSTMENTS

TYPE	MDL	EFF. AREA	TOT ADJ PTS	EFF. BASE RATE	REPL. COST NEW	AYB	EYB	ECON	FNCT		NORM	% COND
6500	01	840	58.1900	21.53	18,085	2021	2021	0	0	0	3.00	97.00

2 GARAGE RES – 100% - 2005 Heated Area: 840 HX Base Yr 2005

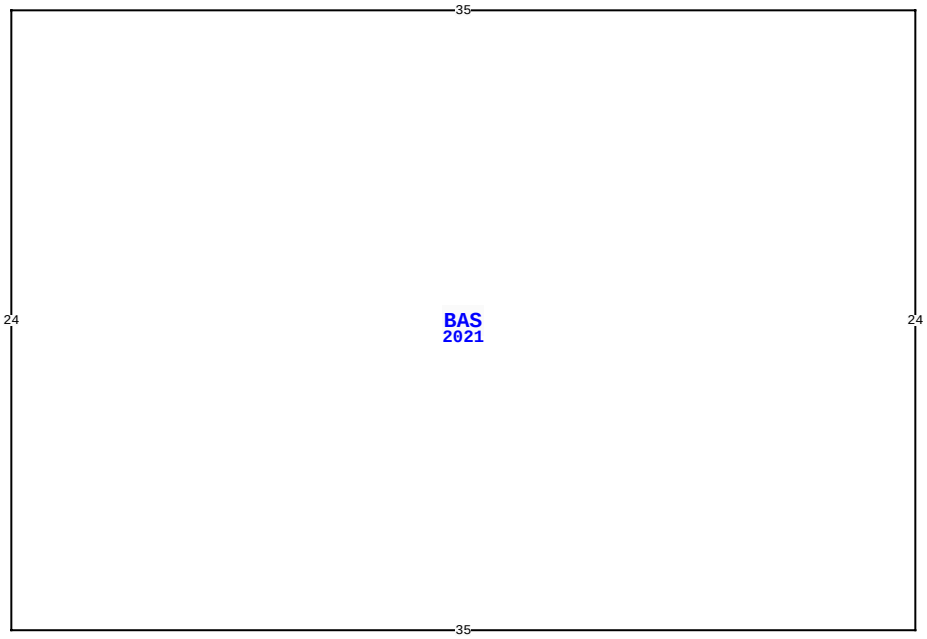

55133 DEER RUN RD, CALLAHAN

BLD DATE		LGL DATE	
XF DATE		LAND DATE	04/04/2024 MLU
INC DATE		AG DATE	

VALUATION SUMMARY

VALUATION BY		STANDARD
Tax Group: 6	Tax Dist:	
BUILDING MARKET VALUE		462,006
TOTAL MARKET OB/XF VALUE		28,071
TOTAL LAND VALUE - MARKET		55,000
TOTAL MARKET VALUE		545,077
SOH/AGL Deduction		259,131
ASSESSED VALUE		285,946
TOTAL EXEMPTION VALUE	HX HB	50,722
BASE TAXABLE VALUE		235,224
TOTAL JUST VALUE		545,077
NCON VALUE		0
INCOME VALUE		
PREVIOUS YEAR MKT VALUE		515,606

PERMIT NUM	DESCRIPTION	AMT	ISSUED

SALES DATA

OFF RECORD Number	DATE	TYPE INST	Q / U	V / I	RSN CD	SALE PRICE
0691/1113	11/02/1993	WD	Q	V		17,000
GRANTOR: HURST LOYD & BARBARA						
GRANTEE: SKELTON MAURICE JR						
0590/1268	2/20/1990	WD	Q	V		14,500
GRANTOR: SPRING LAKE ESTATES						
GRANTEE: HURST LOYD & BARBAR						

BUILDING NOTES

BUILDING DIMENSIONS

BAS=[YR=2021] W35 S24 E35 N24$.

EXTRA FEATURES

LN	OB/XF CODE	DESCRIPTION	BLD	CAP	L	W	UNITS	UT	Adj R	ADJ UNIT PRICE	ORIG COND	YEAR ON	YEAR ACTUAL	Q	% COND	OB/XF MKT VALUE	NOTES

LAND DESCRIPTION

TOTAL OB/XF 0

LN	USE CODE	CLS	LAND USE DESCRIPTION	CAP	RD	LOC ZONE	FRONT	DEPTH	TOT LND UTS	UNIT TYPE	DT	DPTH FACT	% COND	TOT ADJ	UNIT PRICE	ADJ UNIT PRICE	LAND VALUE	OTHER ADJUSTMENTS AND NOTES	YEAR	DENSITY	DECL	FRZ	YR	CONSRV

REVIEW DATE 06/14/2022 BY TW Total Acres: 0.00 Total Land Value: 55,000 Market: 0 Agricultural: 0 Common: 55,000 PRINTED 07/30/2025 BY SYS