BLOCK 4 LOT 1
IN OR 2076/252
SPRING LAKE EST #1 PB 5/183

PILCHER JOHN & DANIELLE
9947 NW 156TH TERR
LAKE BUTLER, FL 32054

2025

46-2N-25-197A-0004-0010

BUILDING CHARACTERISTICS

ELEMENT	CD	CONSTRUCTION
Exterior Wall	20	FACE BRICK 90
Exterior Wall	05	AVERAGE 10
Roof Structur	03	GABLE/HIP 100
Roof Cover	03	COMP SHNGL 100
Interior Wall	05	DRYWALL 100
Interior Floo	14	CARPET 80
Interior Floo	08	SHT VINYL 20
Air Condition	03	CENTRAL 100
Heating Type	04	AIR DUCTED 100
Bedrooms		3 100
Bathrooms		2 100
Frame	02	WOOD FRAME 100
Stories	1.	1. 100
Units		0 100
Occupancy	00	NONE 100
Quality	03	Quality Level 03
DOR CODE	0100	SINGLE FAMILY
MAP NUM		MKT AREA 08
NEIGHBORHOOD/LOC	8010.00	

AREA TYPE	TOTAL GROSS AREA	PCT OF BASE	YEAR	TOT ADJ AREA	SUBAREA MARKET VALUE
BAS	1,715	100	1993	1,715	188,745
FGR	624	55	1993	343	37,749
FOP	55	30	1993	16	1,761
USP	519	30	2003	156	17,169
TOTALS	2,913			2,230	245,423

MARKET ADJUSTMENTS

TYPE	MDL	EFF. AREA	TOT ADJ PTS	EFF. BASE RATE	REPL. COST NEW	AYB	EYB	ECON	FNCT		NORM	% COND
0900	01	2,230	106.5260	140.61	313,560	1989	1994	0	0	0	21.73	78.27

1 SNGL FAM – 0% - 0 Heated Area: 1715 HX Base Yr

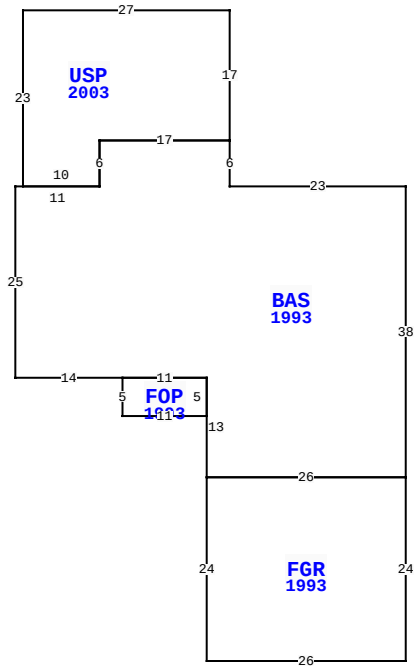

55011 DEER RUN RD, CALLAHAN

BLD DATE		LGL DATE	
XF DATE		LAND DATE	04/04/2024 MLU
INC DATE		AG DATE	

NASSAU COUNTY PROPERTY

PAGE 1 of 1 6

VALUATION SUMMARY

VALUATION BY	STANDARD
Tax Group: 6	Tax Dist:
BUILDING MARKET VALUE	245,423
TOTAL MARKET OB/XF VALUE	13,183
TOTAL LAND VALUE - MARKET	55,000
TOTAL MARKET VALUE	313,606
SOH/AGL Deduction	24,846
ASSESSED VALUE	288,760
TOTAL EXEMPTION VALUE	0
BASE TAXABLE VALUE	288,760
TOTAL JUST VALUE	313,606
NCON VALUE	0
INCOME VALUE	
PREVIOUS YEAR MKT VALUE	303,287

PERMIT NUM	DESCRIPTION	AMT	ISSUED
E10525	NEW CONSTR	300	12/01/2002
B9655	GARAGE	14,520	04/01/2002
R4098	REPAIR/RRF	2,000	04/01/2002

SALES DATA

OFF RECORD Number	DATE	TYPE INST	Q U /	V I /	RSN CD	SALE PRICE
2076/0252	9/30/2016	WD	U	I	12	155,200
GRANTOR: SYNOVUS BANK						
GRANTEE: PILCHER JOHN & DNAI						
2054/0160	6/21/2016	CT	U	I	18	100
GRANTOR: CLERK OF COURT						
GRANTEE: SYNOVUS BANK						

BUILDING NOTES

BUILDING DIMENSIONS

BAS=[YR=1993] W23 N6 USP=[YR=2003] N17 W27 S23 E10 N6 E17$
W17 S6 W11 S25 E14 FOP=[YR=1993] S5 E11 N5 W11$ E11 S13
FGR=[YR=1993] S24 E26 N24 W26$ E26 N38$.

EXTRA FEATURES

LN	OB/XF CODE	DESCRIPTION	BLD	CAP	L	W	UNITS	UT	Adj R	ADJ UNIT PRICE	ORIG COND	YEAR ON	YEAR ACTUAL	Q	% COND	OB/XF MKT VALUE	NOTES
1	0500	FP-PRE FAB	0	0	0	0	1.00	UT	3,500.00	3,500.00	100	1989	1989	3	64	2,240	
2	0812	CONCRETE C	0	0	0	0	1,872.00	SF	4.00	4.00	100	1989	1989	3	54.5	4,081	
3	0510	GARAGE WD-	0	0	22	20	440.00	SF	35.00	35.00	100	2002	2002	3	29	4,466	
4	0812	CONCRETE C	0	0	0	0	1,051.00	SF	4.00	4.00	100	1990	1990	3	57	2,396	

LAND DESCRIPTION

TOTAL OB/XF 13,183

LN	USE CODE	CLS	LAND USE DESCRIPTION	CAP	RD	LOC ZONE	FRONT	DEPTH	TOT LND UTS	UNIT TYPE	DT	DPTH FACT	% COND	TOT ADJ	UNIT PRICE	ADJ UNIT PRICE	LAND VALUE	OTHER ADJUSTMENTS AND NOTES	YEAR	DENSITY	DECL	FRZ	YR	CONSRV
1	000100	C	RES	0		RSF-1	0.00	0.00	1.00	LT		1.00	1.00	1.00	55,000.00	55,000.00	55,000							

REVIEW DATE 06/05/2020 BY KBA Total Acres: 0.00 Total Land Value: 55,000 Market: 0 Agricultural: 0 Common: 55,000 PRINTED 07/30/2025 BY SYS