BLOCK 3 LOT 23
IN OR 571 PG 904
SPRING LAKE EST #1 PB 5/183

ROWLAND HERMAN G & SUSAN M
55212 DEER RUN DRIVE
CALLAHAN, FL 32011

**2025**

**46-2N-25-197A-0003-0230**

## NASSAU COUNTY PROPERTY



## BUILDING CHARACTERISTICS

| ELEMENT | CD | CONSTRUCTION |
|---|---|---|
| Exterior Wall | 20 | FACE BRICK 100 |
| Roof Structur | 03 | GABLE/HIP 100 |
| Roof Cover | 03 | COMP SHNGL 100 |
| Interior Wall | 05 | DRYWALL 100 |
| Interior Floo | 14 | CARPET 90 |
| Interior Floo | 08 | SHT VINYL 10 |
| Air Condition | 01 | NONE 100 |
| Heating Type | 01 | NONE 100 |
| Bedrooms | | 1 100 |
| Bathrooms | | 1 100 |
| Frame | 02 | WOOD FRAME 100 |
| Stories | 2. | 2. 100 |
| Units | | 0 100 |
| Occupancy | 00 | NONE 100 |
| Quality | 06 | Quality Level 06 |

DOR CODE 0100 SINGLE FAMILY
MAP NUM | MKT AREA 08
NEIGHBORHOOD/LOC 8010.00

| AREA TYPE | TOTAL GROSS AREA | PCT OF BASE | YEAR | TOT ADJ AREA | SUBAREA MARKET VALUE |
|---|---|---|---|---|---|
| BAS | 725 | 100 | 1993 | 725 | 33,754 |
| FUS | 392 | 100 | 2002 | 392 | 18,250 |
| TOTALS | 1,117 | | | 1,117 | 52,004 |

## MARKET ADJUSTMENTS

| TYPE | MDL | EFF. AREA | TOT ADJ PTS | EFF. BASE RATE | REPL. COST NEW | AYB | EYB | ECON | FNCT | | NORM | % COND |
|---|---|---|---|---|---|---|---|---|---|---|---|---|
| 0150 | 01 | 1,117 | 115.8050 | 61.38 | 68,561 | 1991 | 1991 | 0 | 0 | 0 | 24.15 | 75.85 |

1 ACCESORY U – 100% - 1996 Heated Area: 1117 HX Base Yr 1996

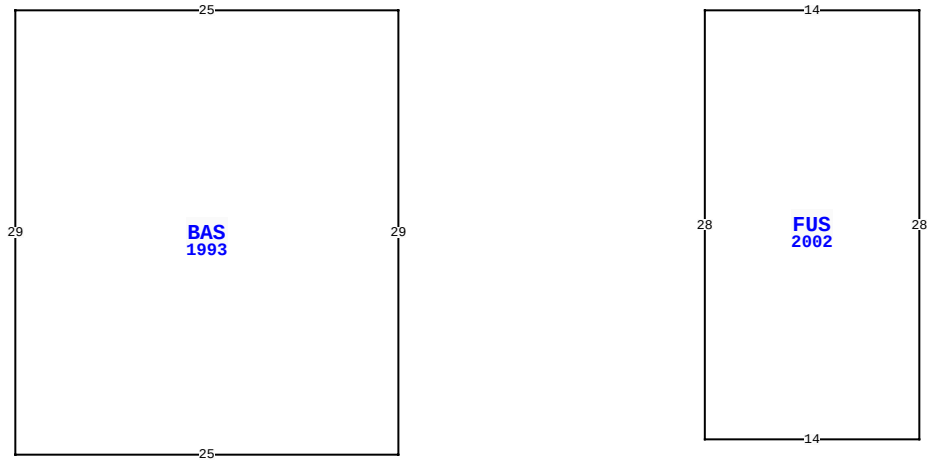


55212 DEER RUN RD, CALLAHAN

| | | | |
|---|---|---|---|
| BLD DATE | | LGL DATE | |
| XF DATE | | LAND DATE | 04/04/2024 MLU |
| INC DATE | | AG DATE | |

## VALUATION SUMMARY

| | | |
|---|---|---|
| VALUATION BY | | STANDARD |
| Tax Group: 6 | Tax Dist: | |
| BUILDING MARKET VALUE | | 506,534 |
| TOTAL MARKET OB/XF VALUE | | 14,917 |
| TOTAL LAND VALUE - MARKET | | 55,000 |
| TOTAL MARKET VALUE | | 576,451 |
| SOH/AGL Deduction | | 93,124 |
| ASSESSED VALUE | | 483,327 |
| TOTAL EXEMPTION VALUE | HX HB | 50,722 |
| BASE TAXABLE VALUE | | 432,605 |
| TOTAL JUST VALUE | | 576,451 |
| NCON VALUE | | 0 |
| INCOME VALUE | | |
| PREVIOUS YEAR MKT VALUE | | 555,770 |

| PERMIT NUM | DESCRIPTION | AMT | ISSUED |
|---|---|---|---|
| 21008660 | CO ISSUED | 0 | 07/01/2021 |
| 18004489 | REPAIR/RRF | 100,000 | 06/01/2018 |
| 93591 | NEW CONSTR | 50,133 | 11/11/1993 |
| 3794 | NEW CONSTR | 4,000 | 01/30/1990 |
| B6085 | NEW CONSTR | 98,818 | 10/31/1989 |

## SALES DATA

| OFF RECORD Number | DATE | TYPE INST | Q / U | V / I | RSN CD | SALE PRICE |
|---|---|---|---|---|---|---|
| 0571/0904 | 6/02/1989 | WD | Q | V | | 31,700 |

GRANTOR: SPRING LAKE EST
GRANTEE: ROWLAND HERMAN & S

## BUILDING NOTES

## BUILDING DIMENSIONS

BAS=[YR=1993] W25 S29 E25 N29$ PTR= E20 FUS=[YR=2002] E14 S28 W14 N28$ W20$ .

## EXTRA FEATURES

| LN | OB/XF CODE | DESCRIPTION | BLD | CAP | L | W | UNITS | UT | Adj R | ADJ UNIT PRICE | ORIG COND | YEAR ON | YEAR ACTUAL | Q | % COND | OB/XF MKT VALUE | NOTES |
|---|---|---|---|---|---|---|---|---|---|---|---|---|---|---|---|---|---|
| 1 | 0812 | CONCRETE C | 0 | 100 | 0 | 0 | 3,681.00 | SF | 4.00 | 4.00 | 100 | 2002 | 2002 | 3 | 80 | 11,779 | |
| 2 | 0473 | VF 3 RAIL | 0 | 100 | 0 | 0 | 176.00 | LF | 7.50 | 7.50 | 100 | 2002 | 2002 | 3 | 55 | 726 | |
| 3 | 0470 | VNYL GATE | 0 | 100 | 0 | 0 | 2.00 | UT | 330.00 | 330.00 | 100 | 2002 | 2002 | 3 | 55 | 363 | |
| 4 | 0473 | VF 3 RAIL | 0 | 100 | 0 | 0 | 54.00 | LF | 7.50 | 7.50 | 100 | 2004 | 2004 | 3 | 61 | 247 | |
| 5 | 0476 | VF 6 SBPL | 0 | 100 | 0 | 0 | 88.00 | LF | 32.00 | 32.00 | 100 | 2005 | 2005 | 3 | 64 | 1,802 | |

## LAND DESCRIPTION

TOTAL OB/XF 14,917

| LN | USE CODE | CLS | LAND USE DESCRIPTION | CAP | RD | LOC ZONE | FRONT | DEPTH | TOT LND UTS | UNIT TYPE | DT | DPTH FACT | % COND | TOT ADJ | UNIT PRICE | ADJ UNIT PRICE | LAND VALUE | OTHER ADJUSTMENTS AND NOTES | YEAR | DENSITY | DECL | FRZ | YR | CONSRV |
|---|---|---|---|---|---|---|---|---|---|---|---|---|---|---|---|---|---|---|---|---|---|---|---|---|
| 1 | 000134 | C | RES POND | 100 | | RSF-1 | 0.00 | 0.00 | 1.00 | LT | | 1.00 | 1.00 | 1.00 | 55,000.00 | 55,000.00 | 55,000 | | | | | | | |

REVIEW DATE 10/21/2021 BY KB Total Acres: 0.00 Total Land Value: 55,000 Market: 0 Agricultural: 0 Common: 55,000 PRINTED 07/30/2025 BY SYS

BLOCK 3 LOT 23
IN OR 571 PG 904
SPRING LAKE EST #1 PB 5/183

ROWLAND HERMAN G & SUSAN M
55212 DEER RUN DRIVE
CALLAHAN, FL 32011

**2025**

**46-2N-25-197A-0003-0230**

## BUILDING CHARACTERISTICS

| ELEMENT | CD | CONSTRUCTION |
|---|---|---|
| Exterior Wall | 19 | COMMON BRK 100 |
| Roof Structur | 08 | IRREGULAR 100 |
| Roof Cover | 03 | COMP SHNGL 100 |
| Interior Wall | 05 | DRYWALL 100 |
| Interior Floo | 11 | CLAY TILE 50 |
| Interior Floo | 14 | CARPET 50 |
| Air Condition | 03 | CENTRAL 100 |
| Heating Type | 04 | AIR DUCTED 100 |
| Bedrooms | | 3 100 |
| Bathrooms | | 2.5 100 |
| Frame | 02 | WOOD FRAME 100 |
| Stories | 2. | 2. 100 |
| Units | | 0 100 |
| Occupancy | 00 | NONE 100 |
| Quality | 03 | Quality Level 03 |
| DOR CODE | 0100 | SINGLE FAMILY |
| MAP NUM | | MKT AREA 08 |
| NEIGHBORHOOD/LOC | 8010.00 | |

| AREA TYPE | TOTAL GROSS AREA | PCT OF BASE | YEAR | TOT ADJ AREA | SUBAREA MARKET VALUE |
|---|---|---|---|---|---|
| BAS | 1,854 | 100 | 2007 | 1,854 | 286,730 |
| FGR | 600 | 55 | 2007 | 330 | 51,036 |
| FOP | 20 | 30 | 2007 | 6 | 928 |
| FOP | 149 | 30 | 2007 | 45 | 6,960 |
| FUS | 673 | 100 | 2021 | 673 | 104,083 |
| PTO | 453 | 5 | 2007 | 23 | 3,557 |
| STR | 79 | 10 | 2021 | 8 | 1,237 |
| TOTALS | 3,828 | | | 2,939 | 454,530 |

## MARKET ADJUSTMENTS

| TYPE | MDL | EFF. AREA | TOT ADJ PTS | EFF. BASE RATE | REPL. COST NEW | AYB | EYB | ECON | FNCT | | NORM | % COND |
|---|---|---|---|---|---|---|---|---|---|---|---|---|
| 0900 | 01 | 2,939 | 121.7300 | 160.68 | 472,239 | 2007 | 2021 | 0 | 0 | 0 | 3.75 | 96.25 |

2 SNGL FAM – 100% - 1996 Heated Area: 2527 HX Base Yr 1996

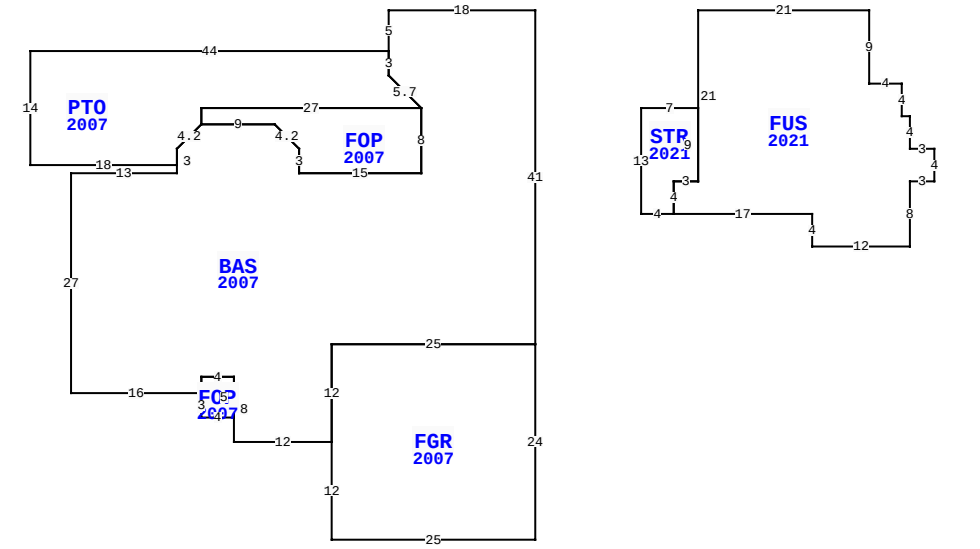


55212 DEER RUN RD, CALLAHAN

| | | | |
|---|---|---|---|
| BLD DATE | | LGL DATE | |
| XF DATE | | LAND DATE | 04/04/2024 MLU |
| INC DATE | | AG DATE | |

## NASSAU COUNTY PROPERTY

PAGE 2 of 2 6

### VALUATION SUMMARY

| | | |
|---|---|---|
| VALUATION BY | | STANDARD |
| Tax Group: 6 | Tax Dist: | |
| BUILDING MARKET VALUE | | 506,534 |
| TOTAL MARKET OB/XF VALUE | | 14,917 |
| TOTAL LAND VALUE - MARKET | | 55,000 |
| TOTAL MARKET VALUE | | 576,451 |
| SOH/AGL Deduction | | 93,124 |
| ASSESSED VALUE | | 483,327 |
| TOTAL EXEMPTION VALUE | HX HB | 50,722 |
| BASE TAXABLE VALUE | | 432,605 |
| TOTAL JUST VALUE | | 576,451 |
| NCON VALUE | | 0 |
| INCOME VALUE | | |
| PREVIOUS YEAR MKT VALUE | | 555,770 |

| PERMIT NUM | DESCRIPTION | AMT | ISSUED |
|---|---|---|---|
| | | | |

## SALES DATA

| OFF RECORD Number | DATE | TYPE INST | Q / U | V / I | RSN CD | SALE PRICE |
|---|---|---|---|---|---|---|
| 0571/0904 | 6/02/1989 | WD | Q | V | | 31,700 |

GRANTOR: SPRING LAKE EST

GRANTEE: ROWLAND HERMAN & S

## BUILDING NOTES

## BUILDING DIMENSIONS

BAS=[YR=2007] W18 S5 PTO=[YR=2007] W44 S14 E18 N2 U3 R3 FOP=[YR=2007] E9 D3 R3 S3 E15 N8 W27 S2$ N2 E27 U4 L4 N3$ S3 D4 R4 S8 W15 N3 U3 L3 W9 D3 L3 S3 W13 S27 E16 FOP=[YR=2007] S3 E4 N5 W4 S2$ N2 E4 S8 E12 FGR=[YR=2007] S12 E25 N24 W25 S12$ N12 E25 N41$ PTR=E20 FUS=[YR=2021] E21 S9 E4 S4 E1 S4 E3 S4 W3 S8 W12 N4 W17 STR=[YR=2021] W4 N13 E7 S9 W3 S4$ N4 E3 N21$ W20$.

## EXTRA FEATURES

| LN | OB/XF CODE | DESCRIPTION | BLD | CAP | L | W | UNITS | UT | Adj R | ADJ UNIT PRICE | ORIG COND | YEAR ON | YEAR ACTUAL | Q | % COND | OB/XF MKT VALUE | NOTES |
|---|---|---|---|---|---|---|---|---|---|---|---|---|---|---|---|---|---|

## LAND DESCRIPTION

TOTAL OB/XF 0

| LN | USE CODE | CLS | LAND USE DESCRIPTION | CAP | RD | LOC ZONE | FRONT | DEPTH | TOT LND UTS | UNIT TYPE | DT | DPTH FACT | % COND | TOT ADJ | UNIT PRICE | ADJ UNIT PRICE | LAND VALUE | OTHER ADJUSTMENTS AND NOTES | YEAR | DENSITY | DECL | FRZ | YR | CONSRV |
|---|---|---|---|---|---|---|---|---|---|---|---|---|---|---|---|---|---|---|---|---|---|---|---|---|

REVIEW DATE 10/21/2021 BY KB Total Acres: 0.00 Total Land Value: 55,000 Market: 0 Agricultural: 0 Common: 55,000 PRINTED 07/30/2025 BY SYS