BLOCK 3 LOT 12
IN OR 1232/180
SPRING LAKE EST #1 PB 5/183

UNDERWOOD JILL
55030 DEER RUN RD
CALLAHAN, FL 32011

2025

46-2N-25-197A-0003-0120

NASSAU COUNTY PROPERTY

BUILDING CHARACTERISTICS

ELEMENT	CD	CONSTRUCTION
Exterior Wall	12	CEDAR 100
Roof Structur	03	GABLE/HIP 100
Roof Cover	03	COMP SHNGL 100
Interior Wall	05	DRYWALL 90
Interior Wall	06	CUST PANEL 10
Interior Floo	14	CARPET 60
Interior Floo	11	CLAY TILE 40
Air Condition	03	CENTRAL 100
Heating Type	04	AIR DUCTED 100
Bedrooms		3 100
Bathrooms		2.5 100
Frame	02	WOOD FRAME 100
Stories	2.	2. 100
Units		0 100
Occupancy	00	NONE 100
Quality	03	Quality Level 03
DOR CODE	0100	SINGLE FAMILY
MAP NUM		MKT AREA 08
NEIGHBORHOOD/LOC	8010.00	

AREA TYPE	TOTAL GROSS AREA	PCT OF BASE	YEAR	TOT ADJ AREA	SUBAREA MARKET VALUE
BAS	1,629	100	1993	1,629	202,688
BAS	80	100	1994	80	9,954
FOP	50	30	1993	15	1,867
FOP	430	30	1993	129	16,051
FSP	102	40	1993	41	5,101
FUS	536	100	1993	536	66,692
PTO	75	5	1994	4	498
UGR	576	45	1993	259	32,226
UOP	96	20	2025	19	2,364
USP	224	30	2025	67	8,337
TOTALS	3,798			2,779	345,778

MARKET ADJUSTMENTS

TYPE	MDL	EFF. AREA	TOT ADJ PTS	EFF. BASE RATE	REPL. COST NEW	AYB	EYB	ECON	FNCT		NORM	% COND
0900	01	2,779	113.5680	149.91	416,600	1990	1990	0	0	0	17.00	83.00

1 SNGL FAM – 100% - 2024 Heated Area: 2245 HX Base Yr 2024

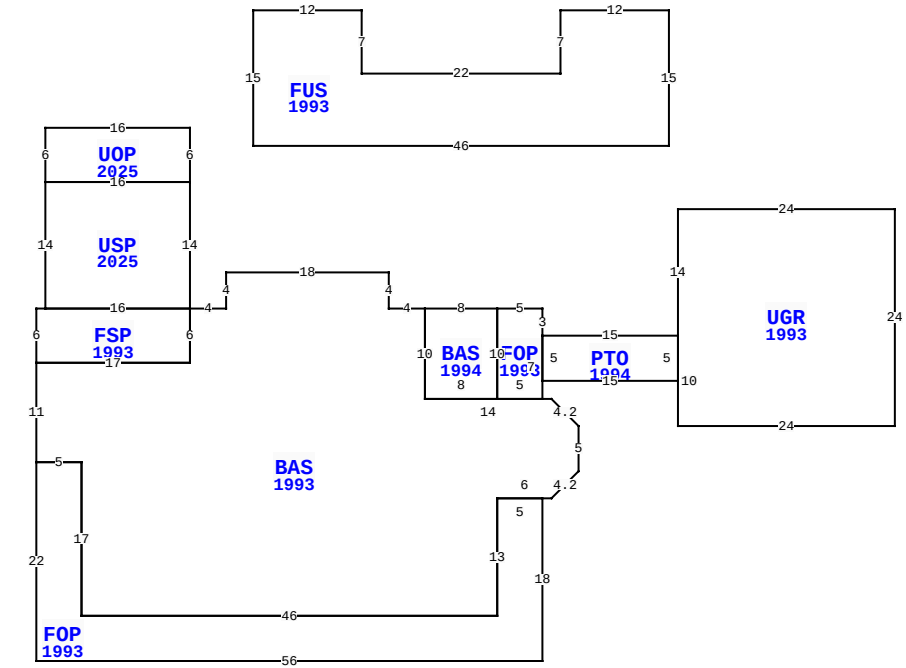

55030 DEER RUN RD, CALLAHAN

BLD DATE		LGL DATE	
XF DATE		LAND DATE	04/04/2024 MLU
INC DATE		AG DATE	

VALUATION SUMMARY

VALUATION BY		STANDARD
Tax Group: 6	Tax Dist:	
BUILDING MARKET VALUE		345,778
TOTAL MARKET OB/XF VALUE		7,319
TOTAL LAND VALUE - MARKET		55,000
TOTAL MARKET VALUE		408,097
SOH/AGL Deduction		99,873
ASSESSED VALUE		308,224
TOTAL EXEMPTION VALUE	HX HB	50,722
BASE TAXABLE VALUE		257,502
TOTAL JUST VALUE		408,097
NCON VALUE		10,702
INCOME VALUE		
PREVIOUS YEAR MKT VALUE		380,643

PERMIT NUM	DESCRIPTION	AMT	ISSUED
B240001411	SCREEN ROOM ON NE	7,639	02/05/2024
6292	NEW CONSTR	100,423	02/16/1990

SALES DATA

OFF RECORD Number	DATE	TYPE INST	Q / U	V / I	RSN CD	SALE PRICE
1232/0180	5/20/2004	WD	Q	I		184,000
GRANTOR: WOOD SHELLEY J						
GRANTEE: UNDERWOOD JILL						
0687/0502	8/25/1993	WD	Q	I		126,500
GRANTOR: PEEBLES MACK & BEV						
GRANTEE: WOOD STEVEN & S J						

BUILDING NOTES

EXTRA FEATURES

L N	OB/XF CODE	DESCRIPTION	BLD	CAP	L	W	UNITS	UT	Adj R	ADJ UNIT PRICE	ORIG COND	YEAR ON	YEAR ACTUAL	Q	% COND	OB/XF MKT VALUE	NOTES
1	0500	FP-PRE FAB	0	100	0	0	1.00	UT	3,500.00	3,500.00	100	1990	1990	3	66	2,310	
2	0812	CONCRETE C	0	100	0	0	2,197.00	SF	4.00	4.00	100	1990	1990	3	57	5,009	

BUILDING DIMENSIONS

BAS=[YR=1993;ORIG=-52,11] W4 N4 W18 S4 W4 S6 W17 S11 E5 S17 E46 N13 E6 U3R3 N5 U3L3 W14 N10 $
UGR=[YR=1993;ORIG=0,0] W24 S14 S10 E24 N24 $
FUS=[YR=1993;ORIG=-71,-22] E12 S7 E22 N7 E12 S15 W46 N15 $
FOP=[YR=1993;ORIG=-95,28] S22 E56 N18 W5 S13 W46 N17 W5 $
FSP=[YR=1993;ORIG=-78,11] W16 W1 S6 E17 N6 $
BAS=[YR=1994;ORIG=-44,11] W8 S10 E8 N10 $
PTO=[YR=1994;ORIG=-24,14] W15 S5 E15 N5 $
FOP=[YR=1993;ORIG=-39,14] N3 W5 S10 E5 N7 $
PTR=[ORIG=0,0] E20 W20 $
USP=[YR=2025;ORIG=-94,11] E16 N14 W16 S14 $
UOP=[YR=2025;ORIG=-94,-3] E16 N6 W16 S6 $

LAND DESCRIPTION

TOTAL OB/XF 7,319

L N	USE CODE	CLS	LAND USE DESCRIPTION	CAP	R D	LOC ZONE	FRONT	DEPTH	TOT LND UTS	UNIT TYPE	D T	DPTH FACT	% COND	TOT ADJ	UNIT PRICE	ADJ UNIT PRICE	LAND VALUE	OTHER ADJUSTMENTS AND NOTES	YEAR	DENSITY	DECL	FRZ	YR	CONSRV
1	000100	C	RES	100	0006	RSF-1	0.00	0.00	1.00	LT		1.00	1.00	1.00	55,000.00	55,000.00	55,000							

REVIEW DATE 06/06/2024 BY TW Total Acres: 0.00 Total Land Value: 55,000 Market: 0 Agricultural: 0 Common: 55,000 PRINTED 07/30/2025 BY SYS