BLOCK 3 LOT 6
IN OR 1959/1872
SPRING LAKE EST #1 PB 5/183

GINN DARNELL
55011 DOGWOOD COURT
CALLAHAN, FL 32011

2025

46-2N-25-197A-0003-0060

BUILDING CHARACTERISTICS

ELEMENT	CD	CONSTRUCTION
Exterior Wall	20	FACE BRICK 90
Exterior Wall	05	AVERAGE 10
Roof Structur	03	GABLE/HIP 100
Roof Cover	12	MODULAR MT 100
Interior Wall	05	DRYWALL 100
Interior Floo	14	CARPET 70
Interior Floo	08	SHT VINYL 30
Air Condition	03	CENTRAL 100
Heating Type	04	AIR DUCTED 100
Bedrooms		3 100
Bathrooms		2.5 100
Frame	02	WOOD FRAME 100
Stories	1.	1. 100
Units		0 100
BUD8 Adjustme	06	DIST 1D 100
Occupancy	00	NONE 100
Quality	03	Quality Level 03
DOR CODE	0100	SINGLE FAMILY
MAP NUM		MKT AREA 08
NEIGHBORHOOD/LOC	8010.00	

AREA TYPE	TOTAL GROSS AREA	PCT OF BASE	YEAR	TOT ADJ AREA	SUBAREA MARKET VALUE
BAS	1,925	100	1993	1,925	214,326
FGR	552	55	1993	304	33,847
FOP	12	30	1993	4	446
PTO	144	5	1993	7	779
TOTALS	2,633			2,240	249,397

MARKET ADJUSTMENTS

TYPE	MDL	EFF. AREA	TOT ADJ PTS	EFF. BASE RATE	REPL. COST NEW	AYB	EYB	ECON	FNCT		NORM	% COND
0900	01	2,240	108.4860	143.20	320,768	1988	1993	0	0	0	22.25	77.75

1 SNGL FAM – 100% - 2013 Heated Area: 1925 HX Base Yr 2013

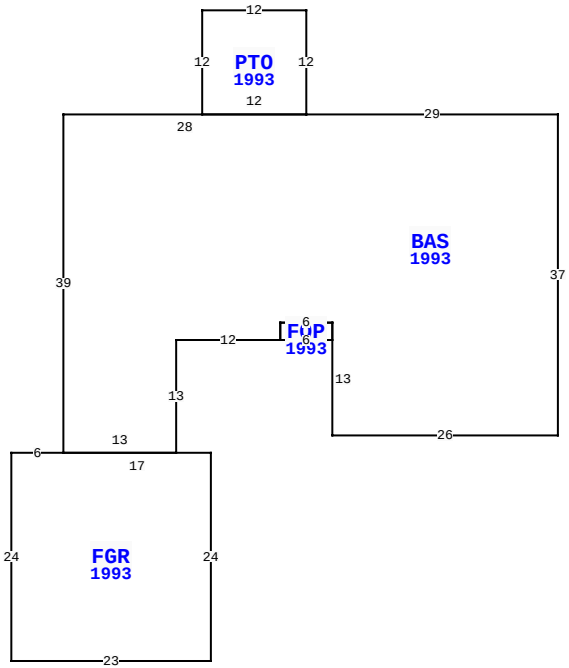

55011 DOGWOOD CT, CALLAHAN

BLD DATE	07/22/2008	JW	LGL DATE	
XF DATE	07/22/2008	JW	LAND DATE	04/04/2024 MLU
INC DATE			AG DATE	

NASSAU COUNTY PROPERTY

PAGE 1 of 1 6

VALUATION SUMMARY

VALUATION BY		STANDARD
Tax Group: 6	Tax Dist:	
BUILDING MARKET VALUE		249,397
TOTAL MARKET OB/XF VALUE		6,618
TOTAL LAND VALUE - MARKET		55,000
TOTAL MARKET VALUE		311,015
SOH/AGL Deduction		165,983
ASSESSED VALUE		145,032
TOTAL EXEMPTION VALUE	HX HB WR	55,722
BASE TAXABLE VALUE		89,310
TOTAL JUST VALUE		311,015
NCON VALUE		0
INCOME VALUE		
PREVIOUS YEAR MKT VALUE		299,641

PERMIT NUM	DESCRIPTION	AMT	ISSUED
2759	H/AC	3,150	10/11/1988
3208	NEW CONSTR	0	09/26/1988
5384	NEW CONSTR	2,000	09/22/1988
5154	NEW CONSTR	72,050	09/09/1988

SALES DATA

OFF RECORD Number	DATE	TYPE INST	Q / U	V / I	RSN CD	SALE PRICE
2372/0342	6/30/2020	FJ	U	I	11	0
GRANTOR: GINN SHERRI A EST						
GRANTEE: GINN DARNELL						
1959/1872	1/28/2015	QC	U	I	11	100
GRANTOR: GINN DARNELL						
GRANTEE: GINN DARNELL						

BUILDING NOTES

BUILDING DIMENSIONS

BAS=[YR=1993] W29 PTO=[YR=1993] N12 W12 S12 E12 $ W28 S39 FGR=[YR=1993] W6 S24 E23 N24 W17 $ E13 N13 E12 FOP=[YR=1993] E6 N2 W6 S2 $ N2 E6 S13 E26 N37 $.

EXTRA FEATURES

LN	OB/XF CODE	DESCRIPTION	BLD	CAP	L	W	UNITS	UT	Adj R	ADJ UNIT PRICE	ORIG COND	YEAR ON	YEAR ACTUAL	Q	% COND	OB/XF MKT VALUE	NOTES
1	0812	CONCRETE C	0	100	0	0	1,951.00	SF	4.00	4.00	100	1990	1990	3	57	4,448	
2	0500	FP-PRE FAB	0	100	0	0	1.00	UT	3,500.00	3,500.00	100	1988	1988	3	62	2,170	

LAND DESCRIPTION

TOTAL OB/XF 6,618

LN	USE CODE	CLS	LAND USE DESCRIPTION	CAP	RD	LOC ZONE	FRONT	DEPTH	TOT LND UTS	UNIT TYPE	DT	DPTH FACT	% COND	TOT ADJ	UNIT PRICE	ADJ UNIT PRICE	LAND VALUE	OTHER ADJUSTMENTS AND NOTES	YEAR	DENSITY	DECL	FRZ	YR	CONSRV
1	000100	C	RES	100	0006	RSF-1	0.00	0.00	1.00	LT		1.00	1.00	1.00	55,000.00	55,000.00	55,000							

REVIEW DATE 10/21/2021 BY KBA Total Acres: 0.00 Total Land Value: 55,000 Market: 0 Agricultural: 0 Common: 55,000 PRINTED 07/30/2025 BY SYS