LOT 135
CLEAR LAKE ESTATES #1 PB 7/346

FINCH RICHARD T/NAVA-FINCH DANIELLE
53455 CLEAR LAKE DRIVE
CALLAHAN, FL 32011

2025

46-2N-25-0240-0135-0000

NASSAU COUNTY PROPERTY

BUILDING CHARACTERISTICS

ELEMENT	CD	CONSTRUCTION
Exterior Wall	20	FACE BRICK 100
Roof Structur	03	GABLE/HIP 100
Roof Cover	03	COMP SHNGL 100
Interior Wall	05	DRYWALL 100
Interior Floo	11	CLAY TILE 100
Air Condition	03	CENTRAL 100
Heating Type	04	AIR DUCTED 100
Bedrooms		3 100
Bathrooms		2.5 100
Frame	02	WOOD FRAME 100
Stories	1.	1. 100
Units		0 100
Occupancy	00	NONE 100
Quality	04	Quality Level 04

DOR CODE 0100 SINGLE FAMILY
MAP NUM | MKT AREA 08
NEIGHBORHOOD/LOC 8015.00

AREA TYPE	TOTAL GROSS AREA	PCT OF BASE	YEAR	TOT ADJ AREA	SUBAREA MARKET VALUE
BAS	2,203	100	2016	2,203	333,402
BAS	216	100	2018	216	32,689
FGR	511	55	2016	281	42,527
FOP	62	30	2016	19	2,875
TOTALS	2,992			2,719	411,493

MARKET ADJUSTMENTS

TYPE	MDL	EFF. AREA	TOT ADJ PTS	EFF. BASE RATE	REPL. COST NEW	AYB	EYB	ECON	FNCT		NORM	% COND
0900	01	2,719	121.9680	161.00	437,759	2016	2016	0	0	0	6.00	94.00

1 SNGL FAM – 100% - 2023 Heated Area: 2419 HX Base Yr 2023

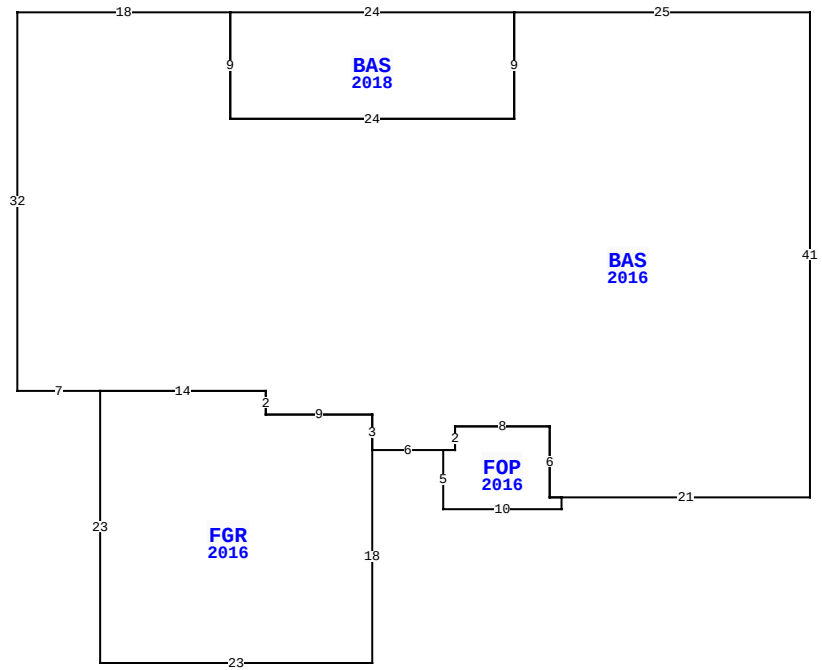

53455 CLEAR LAKE DR, CALLAHAN

BLD DATE		LGL DATE	
XF DATE		LAND DATE	05/14/2014 MF
INC DATE		AG DATE	

VALUATION SUMMARY

VALUATION BY		STANDARD
Tax Group: 6	Tax Dist:	
BUILDING MARKET VALUE		451,612
TOTAL MARKET OB/XF VALUE		55,497
TOTAL LAND VALUE - MARKET		60,000
TOTAL MARKET VALUE		567,109
SOH/AGL Deduction		280,828
ASSESSED VALUE		286,281
TOTAL EXEMPTION VALUE	HX HB	50,722
BASE TAXABLE VALUE		235,559
TOTAL JUST VALUE		567,109
NCON VALUE		0
INCOME VALUE		
PREVIOUS YEAR MKT VALUE		547,891

PERMIT NUM	DESCRIPTION	AMT	ISSUED
19004024	SWIM POOL	40,000	05/01/2019
18009610	GARAGE	80,304	09/20/2018
18002782	ADDITION	11,500	04/01/2018
B1531502	NEW CONSTR	0	03/04/2016
B1531502	CO ISSUED	0	02/11/2016

SALES DATA

OFF RECORD Number	DATE	TYPE INST	Q U	V I	RSN CD	SALE PRICE
2569/1629	5/27/2022	WD	Q	I	02	584,000
GRANTOR: ROBERTSON WILLIAM & E						
GRANTEE: FINCH RICHARD T & D						
2176/0207	12/29/2017	WD	Q	I	01	295,000
GRANTOR: SULLIVAN BRYAN S & KA						
GRANTEE: ROBERTSON WILLIAM T						

BUILDING NOTES

BUILDING DIMENSIONS

BAS=[YR=2016;ORIG=0,-1] W25 S9 W24 N9 W18 S32 E7 E14 S2 E9 S3 E6 E1 N2 E8 S6 E1 E21 N41 $
FGR=[YR=2016;ORIG=-60,31] S23 E23 N18 N3 W9 N2 W14 $
BAS=[YR=2018;ORIG=-25,-1] W24 S9 E24 N9 $
FOP=[YR=2016;ORIG=-31,36] S5 E10 N1 W1 N6 W8 S2 W1 $
.

EXTRA FEATURES

LN	OB/XF CODE	DESCRIPTION	BLD	CAP	L	W	UNITS	UT	Adj R	ADJ UNIT PRICE	ORIG COND	YEAR ON	YEAR ACTUAL	Q	% COND	OB/XF MKT VALUE	NOTES
1	0811	CONCRETE B	0	100	0	0	1,067.00	SF	5.20	5.20	100	2016	2016	3	95	5,271	
2	0811	CONCRETE B	0	100	0	0	1,154.00	SF	5.20	5.20	100	2018	2018	3	97	5,821	
3	0861	POOL GUNIT	0	100	0	0	420.00	SF	85.00	85.00	100	2019	2019	3	87	31,059	
4	0855	CONC PAVER	0	100	0	0	800.00	SF	10.00	10.00	100	2019	2019	3	97	7,760	
5	0855	CONC PAVER	0	100	0	0	570.00	SF	10.00	10.00	100	2020	2020	3	98	5,586	

LAND DESCRIPTION

TOTAL OB/XF 55,497

LN	USE CODE	CLS	LAND USE DESCRIPTION	CAP	RD	LOC ZONE	FRONT	DEPTH	TOT LND UTS	UNIT TYPE	DT	DPTH FACT	% COND	TOT ADJ	UNIT PRICE	ADJ UNIT PRICE	LAND VALUE	OTHER ADJUSTMENTS AND NOTES	YEAR	DENSITY	DECL	FRZ	YR	CONSRV
1	000100	C	RES	100		OR	0.00	0.00	1.00	LT		1.00	1.00	1.00	60,000.00	60,000.00	60,000							

REVIEW DATE 01/06/2023 BY KWA Total Acres: 0.00 Total Land Value: 60,000 Market: 0 Agricultural: 0 Common: 60,000 PRINTED 07/30/2025 BY SYS

LOT 135
CLEAR LAKE ESTATES #1 PB 7/346

FINCH RICHARD T/NAVA-FINCH DANIELLE
53455 CLEAR LAKE DRIVE
CALLAHAN, FL 32011

2025

46-2N-25-0240-0135-0000

NASSAU COUNTY PROPERTY

BUILDING CHARACTERISTICS

ELEMENT	CD	CONSTRUCTION
Exterior Wall	25	MOD METAL 100
Roof Structur	03	GABLE/HIP 100
Roof Cover	12	MODULAR MT 100
Interior Wall	01	MINIMUM 100
Interior Floo	03	CONC FINSH 100
Air Condition	01	NONE 100
Heating Type	01	NONE 100
Bedrooms		0 100
Bathrooms		0 100
Frame	05	STEEL 100
Stories	1.	1. 100
Units		0 100
Occupancy	00	NONE 100
Quality	06	Quality Level 06

DOR CODE 0100 SINGLE FAMILY
MAP NUM | MKT AREA 08
NEIGHBORHOOD/LOC 8015.00

AREA TYPE	TOTAL GROSS AREA	PCT OF BASE	YEAR	TOT ADJ AREA	SUBAREA MARKET VALUE
BAS	1,760	100	2018	1,760	40,119
TOTALS	1,760			1,760	40,119

MARKET ADJUSTMENTS

TYPE	MDL	EFF. AREA	TOT ADJ PTS	EFF. BASE RATE	REPL. COST NEW	AYB	EYB	ECON	FNCT		NORM	% COND
6500	01	1,760	65.5500	24.25	42,680	2018	2018	0	0	0	6.00	94.00

2 GARAGE RES – 100% - 2023 Heated Area: 1760 HX Base Yr 2023

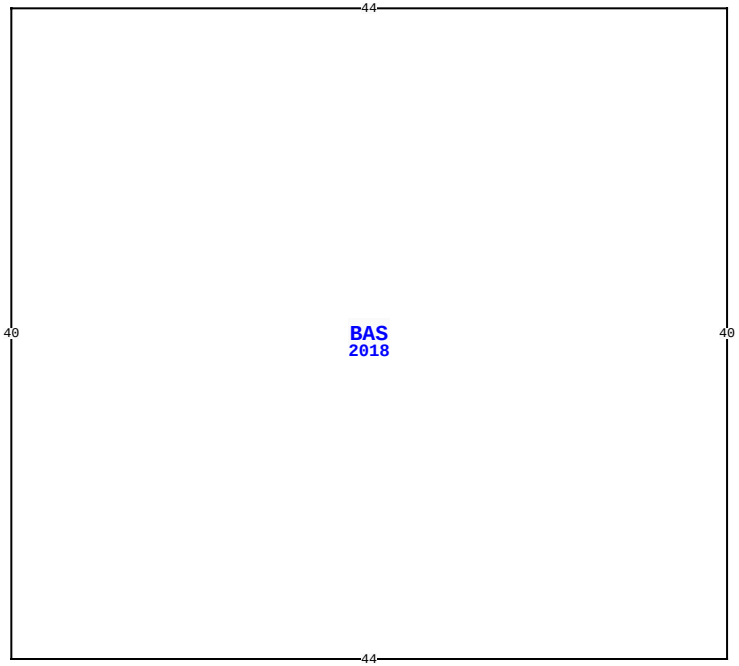

53455 CLEAR LAKE DR, CALLAHAN

BLD DATE		LGL DATE	
XF DATE		LAND DATE	05/14/2014 MF
INC DATE		AG DATE	

VALUATION SUMMARY

VALUATION BY		STANDARD
Tax Group: 6	Tax Dist:	
BUILDING MARKET VALUE		451,612
TOTAL MARKET OB/XF VALUE		55,497
TOTAL LAND VALUE - MARKET		60,000
TOTAL MARKET VALUE		567,109
SOH/AGL Deduction		280,828
ASSESSED VALUE		286,281
TOTAL EXEMPTION VALUE	HX HB	50,722
BASE TAXABLE VALUE		235,559
TOTAL JUST VALUE		567,109
NCON VALUE		0
INCOME VALUE		
PREVIOUS YEAR MKT VALUE		547,891

PERMIT NUM	DESCRIPTION	AMT	ISSUED

SALES DATA

OFF RECORD Number	DATE	TYPE INST	Q / U	V / I	RSN CD	SALE PRICE
2569/1629	5/27/2022	WD	Q	I	02	584,000
GRANTOR: ROBERTSON WILLIAM & E						
GRANTEE: FINCH RICHARD T & D						
2176/0207	12/29/2017	WD	Q	I	01	295,000
GRANTOR: SULLIVAN BRYAN S & KA						
GRANTEE: ROBERTSON WILLIAM T						

BUILDING NOTES

BUILDING DIMENSIONS

BAS=[YR=2018] W44 S40 E44 N40$.

EXTRA FEATURES

LN	OB/XF CODE	DESCRIPTION	BLD	CAP	L	W	UNITS	UT	Adj R	ADJ UNIT PRICE	ORIG COND	YEAR ON	YEAR ACTUAL	Q	% COND	OB/XF MKT VALUE	NOTES

LAND DESCRIPTION

TOTAL OB/XF 0

LN	USE CODE	CLS	LAND USE DESCRIPTION	CAP	RD	LOC ZONE	FRONT	DEPTH	TOT LND UTS	UNIT TYPE	DT	DPTH FACT	% COND	TOT ADJ	UNIT PRICE	ADJ UNIT PRICE	LAND VALUE	OTHER ADJUSTMENTS AND NOTES	YEAR	DENSITY	DECL	FRZ	YR	CONSRV

REVIEW DATE 01/06/2023 BY KWA Total Acres: 0.00 Total Land Value: 60,000 Market: 0 Agricultural: 0 Common: 60,000 PRINTED 07/30/2025 BY SYS