LOT 75
CLEAR LAKE ESTATES UNIT 2
PBK 8/195

SMITH SABASTIAN/
54013 CORLEY DR
CALLAHAN, FL 32011

2025

46-2N-25-0240-0075-0000

NASSAU COUNTY PROPERTY

BUILDING CHARACTERISTICS

ELEMENT	CD	CONSTRUCTION
Exterior Wall	20	FACE BRICK 100
Roof Structur	08	IRREGULAR 100
Roof Cover	03	COMP SHNGL 100
Interior Wall	05	DRYWALL 100
Interior Floo	08	SHT VINYL 100
Air Condition	03	CENTRAL 100
Heating Type	04	AIR DUCTED 100
Bedrooms		4 100
Bathrooms		3 100
Frame	02	WOOD FRAME 100
Stories	2.	2. 100
Units		0 100
Occupancy	00	NONE 100
Quality	04	Quality Level 04

DOR CODE	0100 SINGLE FAMILY		
MAP NUM		MKT AREA	08
NEIGHBORHOOD/LOC	8015.100		

AREA TYPE	TOTAL GROSS AREA	PCT OF BASE	YEAR	TOT ADJ AREA	SUBAREA MARKET VALUE
BAS	1,705	100	2017	1,705	240,740
FGR	536	55	2017	295	41,653
FOP	143	30	2017	43	6,072
FOP	155	30	2017	46	6,495
FUS	640	100	2017	640	90,366
STR	64	10	2017	6	847
TOTALS	3,243			2,735	386,173

MARKET ADJUSTMENTS

TYPE	MDL	EFF. AREA	TOT ADJ PTS	EFF. BASE RATE	REPL. COST NEW	AYB	EYB	ECON	FNCT		NORM	% COND
0900	01	2,735	112.8960	149.02	407,570	2017	2017	0	0	0	5.25	94.75

1 SNGL FAM – 100% - 2018 Heated Area: 2345 HX Base Yr 2018

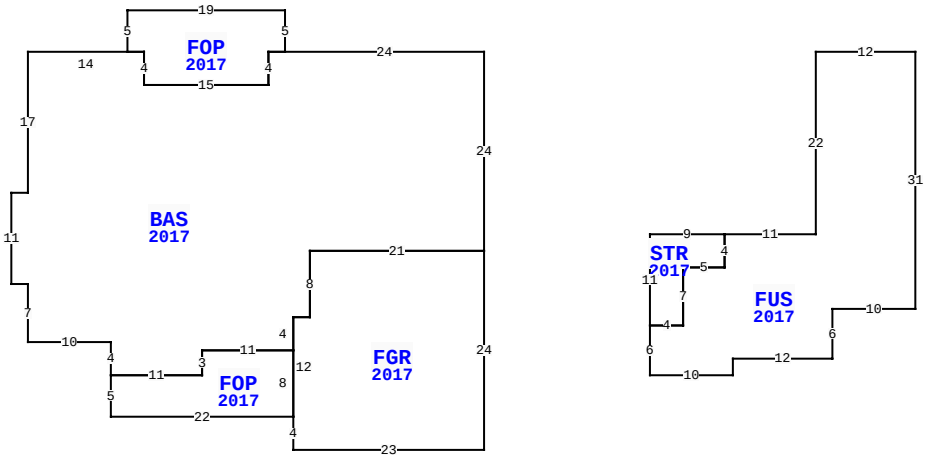

54013 CORLEY DR, CALLAHAN

BLD DATE		LGL DATE	
XF DATE		LAND DATE	
INC DATE		AG DATE	

VALUATION SUMMARY

VALUATION BY		STANDARD
Tax Group: 6	Tax Dist:	
BUILDING MARKET VALUE		386,173
TOTAL MARKET OB/XF VALUE		11,952
TOTAL LAND VALUE - MARKET		60,000
TOTAL MARKET VALUE		458,125
SOH/AGL Deduction		157,760
ASSESSED VALUE		300,365
TOTAL EXEMPTION VALUE	HX HB	50,722
BASE TAXABLE VALUE		249,643
TOTAL JUST VALUE		458,125
NCON VALUE		0
INCOME VALUE		
PREVIOUS YEAR MKT VALUE		440,671

PERMIT NUM	DESCRIPTION	AMT	ISSUED
17002455	CO ISSUED	0	11/21/2017
B172455	NEW CONSTR	299,248	05/01/2017

SALES DATA

OFF RECORD Number	DATE	TYPE INST	Q / U	V / I	RSN CD	SALE PRICE
9999/9999	12/22/2017	CN	Q	I	01	316,500

GRANTOR: GREENE KENNETH L

GRANTEE: SMITH SABASTIAN

BUILDING NOTES

BUILDING DIMENSIONS

BAS=[YR=2017] W24 FOP=[YR=2017] N5 W19 S5 E2 S4 E15 N4 E2$ W2 S4 W15 N4 W14 S17 W2 S11 E2 S7 E10 S4 FOP=[YR=2017] S5 E22 FGR=[YR=2017] S4 E23 N24 W21 S8 W2 S12$ N8 W11 S3 W11$ E11 N3 E11 N4 E2 N8 E21 N24$ PTR=E40 FUS=[YR=2017] E12 S31 W10 S6 W12 S2 W10 N6 STR=[YR=2017] N11 E9 S4 W5 S7 W4$ E4 N7 E5 N4 E11 N22$ W40$.

EXTRA FEATURES

LN	OB/XF CODE	DESCRIPTION	BLD	CAP	L	W	UNITS	UT	Adj R	ADJ UNIT PRICE	ORIG COND	YEAR ON	YEAR ACTUAL	Q	% COND	OB/XF MKT VALUE	NOTES
1	0811	CONCRETE B	0	100	0	0	1,797.00	SF	5.20	5.20	100	2017	2017	3	96	8,971	
2	0810	CONCRETE A	0	100	0	0	468.00	SF	6.50	6.50	100	2020	2020	3	98	2,981	

LAND DESCRIPTION

TOTAL OB/XF 11,952

LN	USE CODE	CLS	LAND USE DESCRIPTION	CAP	RD	LOC ZONE	FRONT	DEPTH	TOT LND UTS	UNIT TYPE	DT	DPTH FACT	% COND	TOT ADJ	UNIT PRICE	ADJ UNIT PRICE	LAND VALUE	OTHER ADJUSTMENTS AND NOTES	YEAR	DENSITY	DECL	FRZ	YR	CONSRV
1	000100	C	RES	100		OR	0.00	0.00	1.00	LT		1.00	1.00	1.00	60,000.00	60,000.00	60,000							

REVIEW DATE 03/25/2021 BY KBA Total Acres: 0.00 Total Land Value: 60,000 Market: 0 Agricultural: 0 Common: 60,000 PRINTED 07/30/2025 BY SYS