LOT 65
CLEAR LAKE ESTATES UNIT 2
PBK 8/195

BAILEY ROBERT M/GERALD JULIA A
54055 CORLEY DR
CALLAHAN, FL 32011

2025

46-2N-25-0240-0065-0000

BUILDING CHARACTERISTICS

ELEMENT	CD	CONSTRUCTION
Exterior Wall	20	FACE BRICK 100
Roof Structur	03	GABLE/HIP 100
Roof Cover	03	COMP SHNGL 100
Interior Wall	05	DRYWALL 100
Interior Floo	08	SHT VINYL 60
Interior Floo	14	CARPET 40
Air Condition	03	CENTRAL 100
Heating Type	04	AIR DUCTED 100
Bedrooms		4 100
Bathrooms		3 100
Frame	02	WOOD FRAME 100
Stories	1.	1. 100
Units		0 100
Occupancy	00	NONE 100
Quality	04	Quality Level 04
DOR CODE	0100	SINGLE FAMILY
MAP NUM		MKT AREA 08
NEIGHBORHOOD/LOC	8015.100	

AREA TYPE	TOTAL GROSS AREA	PCT OF BASE	YEAR	TOT ADJ AREA	SUBAREA MARKET VALUE
BAS	2,385	100	2019	2,385	335,979
FGR	515	55	2019	283	39,867
FOP	46	30	2019	14	1,972
FOP	198	30	2019	59	8,311
TOTALS	3,144			2,741	386,129

MARKET ADJUSTMENTS

TYPE	MDL	EFF. AREA	TOT ADJ PTS	EFF. BASE RATE	REPL. COST NEW	AYB	EYB	ECON	FNCT		NORM	% COND
0900	01	2,741	110.8800	146.36	401,173	2019	2019	0	0	0	3.75	96.25

1 SNGL FAM – 100% - 2020 Heated Area: 2385 HX Base Yr 2020

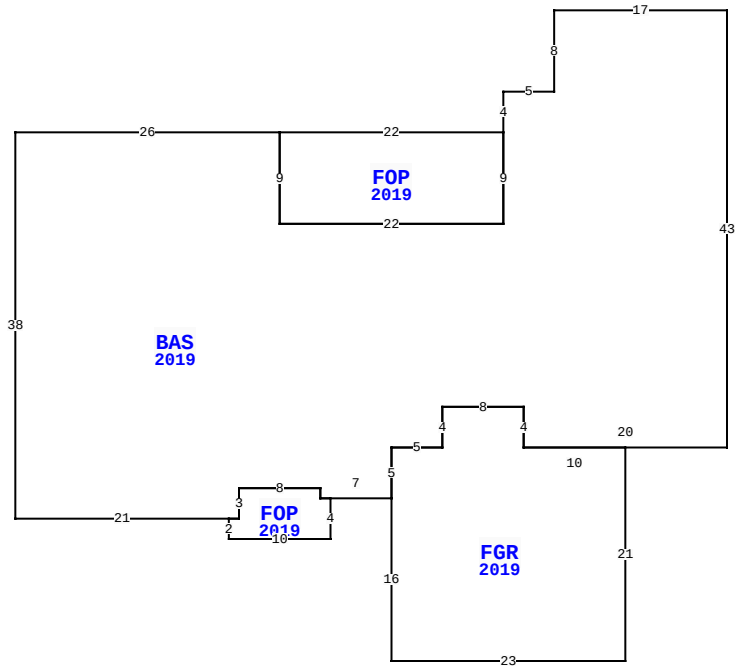

54055 CORLEY DR, CALLAHAN

BLD DATE		LGL DATE	
XF DATE		LAND DATE	
INC DATE		AG DATE	

NASSAU COUNTY PROPERTY

PAGE 1 of 1 6

VALUATION SUMMARY

VALUATION BY		STANDARD
Tax Group: 6	Tax Dist:	
BUILDING MARKET VALUE		386,129
TOTAL MARKET OB/XF VALUE		50,804
TOTAL LAND VALUE - MARKET		60,000
TOTAL MARKET VALUE		496,933
SOH/AGL Deduction		143,393
ASSESSED VALUE		353,540
TOTAL EXEMPTION VALUE	HX HB	50,722
BASE TAXABLE VALUE		302,818
TOTAL JUST VALUE		496,933
NCON VALUE		0
INCOME VALUE		
PREVIOUS YEAR MKT VALUE		480,361

PERMIT NUM	DESCRIPTION	AMT	ISSUED
19001256	CO ISSUED	0	02/08/2019
18007560	SWIM POOL	40,380	10/01/2018
18005301	NEW CONSTR	306,079	08/01/2018

SALES DATA

OFF RECORD Number	DATE	TYPE INST	Q / U	V / I	RSN CD	SALE PRICE
2778/1431	3/31/2025	WD	Q	I	01	565,000
GRANTOR: EISZLER AMANDA R & JO						
GRANTEE: BAILEY ROBERT M						
2255/1174	2/13/2019	WD	Q	I	02	390,000
GRANTOR: KEN GREENE CONTRACTOR						
GRANTEE: EISZLER AMANDA R &						

BUILDING NOTES

BUILDING DIMENSIONS

BAS=[YR=2019] W17 S8 W5 S4 FOP=[YR=2019] W22 S9 E22 N9$ S9 W22 N9 W26 S38 E21 FOP=[YR=2019] S2 E10 N4 W1 N1 W8 S3 W1$ E1 N3 E8 S1 E7 FGR=[YR=2019] S16 E23 N21 W10 N4 W8 S4 W5 S5$ N5 E5 N4 E8 S4 E20 N43$.

EXTRA FEATURES

LN	OB/XF CODE	DESCRIPTION	BLD	CAP	L	W	UNITS	UT	Adj R	ADJ UNIT PRICE	ORIG COND	YEAR ON	YEAR ACTUAL	Q	% COND	OB/XF MKT VALUE	NOTES
1	0811	CONCRETE B	0	100	0	0	1,797.00	SF	5.20	5.20	100	2019	2019	3	97	9,064	
2	0861	POOL GUNIT	0	100	0	0	292.00	SF	85.00	85.00	100	2019	2019	3	87	21,593	
3	0855	CONC PAVER	0	100	0	0	735.00	SF	10.00	10.00	100	2019	2019	3	97	7,130	
4	0476	VF 6 SBPL	0	100	0	0	414.00	LF	32.00	32.00	100	2019	2019	3	94	12,453	
5	0470	VNYL GATE	0	100	0	0	2.00	UT	300.00	300.00	100	2019	2019	3	94	564	

LAND DESCRIPTION

TOTAL OB/XF 50,804

LN	USE CODE	CLS	LAND USE DESCRIPTION	CAP	RD	LOC ZONE	FRONT	DEPTH	TOT LND UTS	UNIT TYPE	DT	DPTH FACT	% COND	TOT ADJ	UNIT PRICE	ADJ UNIT PRICE	LAND VALUE	OTHER ADJUSTMENTS AND NOTES	YEAR	DENSITY	DECL	FRZ	YR	CONSRV
1	000134	C	RES POND	100		OR	0.00	0.00	1.00	LT		1.00	1.00	1.00	60,000.00	60,000.00	60,000							

REVIEW DATE 07/24/2019 BY KB Total Acres: 0.00 Total Land Value: 60,000 Market: 0 Agricultural: 0 Common: 60,000 PRINTED 07/30/2025 BY SYS