LOT 17
LANCEFORD PB 6/356

GREGORY A PETER & RUTH ZIMMER
96199 GRAVEL CREEK DRIVE
YULEE, FL 32097

2025

45-3N-28-121L-0017-0000

NASSAU COUNTY PROPERTY

BUILDING CHARACTERISTICS

ELEMENT	CD	CONSTRUCTION
Exterior Wall	20	FACE BRICK 70
Exterior Wall	31	HARDIE BRD 30
Roof Structur	08	IRREGULAR 100
Roof Cover	03	COMP SHNGL 100
Interior Wall	05	DRYWALL 100
Interior Floo	12	HARDWOOD 60
Interior Floo	14	CARPET 40
Air Condition	03	CENTRAL 100
Heating Type	04	AIR DUCTED 100
Bedrooms		4 100
Bathrooms		3.5 100
Frame	02	WOOD FRAME 100
Stories	2.	2. 100
Units		0 100
Occupancy	00	NONE 100
Quality	04	Quality Level 04
DOR CODE	0100	SINGLE FAMILY
MAP NUM		MKT AREA 04
NEIGHBORHOOD/LOC	4026.00	

AREA TYPE	TOTAL GROSS AREA	PCT OF BASE	YEAR	TOT ADJ AREA	SUBAREA MARKET VALUE
BAS	1,997	100	2007	1,997	249,603
FGR	688	55	2007	378	47,246
FOP	276	30	2007	83	10,374
FOP	332	30	2007	100	12,499
FUS	1,179	100	2007	1,179	147,362
STR	24	10	2018	2	250
STR	27	10	2018	3	375
TOTALS	4,523			3,742	467,709

MARKET ADJUSTMENTS

TYPE	MDL	EFF. AREA	TOT ADJ PTS	EFF. BASE RATE	REPL. COST NEW	AYB	EYB	ECON	FNCT		NORM	% COND
0900	01	3,742	106.7850	140.96	527,472	2007	2007	0	0	0	11.33	88.67

1 SNGL FAM – 100% - 2020 Heated Area: 3176 HX Base Yr 2020

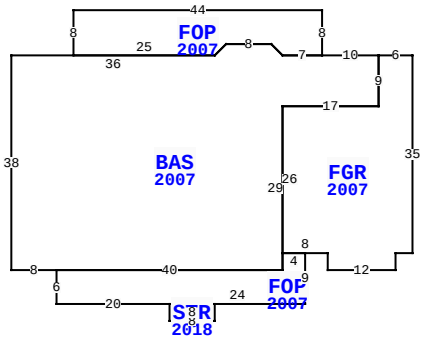

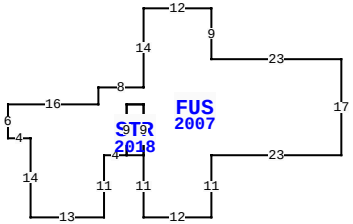

96199 GRAVEL CREEK DR, YULEE

BLD DATE		LGL DATE	
XF DATE		LAND DATE	05/06/2025 MLU
INC DATE		AG DATE	

VALUATION SUMMARY

VALUATION BY		STANDARD
Tax Group: 4	Tax Dist:	
BUILDING MARKET VALUE		467,709
TOTAL MARKET OB/XF VALUE		44,527
TOTAL LAND VALUE - MARKET		125,000
TOTAL MARKET VALUE		637,236
SOH/AGL Deduction		189,193
ASSESSED VALUE		448,043
TOTAL EXEMPTION VALUE	HX HB DX	55,722
BASE TAXABLE VALUE		392,321
TOTAL JUST VALUE		637,236
NCON VALUE		0
INCOME VALUE		
PREVIOUS YEAR MKT VALUE		657,285

PERMIT NUM	DESCRIPTION	AMT	ISSUED
B20883	SCRN ENCL	12,000	12/01/2007
B20800	SWIM POOL	23,000	11/01/2007
E17981	ELEC OTHER	2,000	08/01/2006
M11934	MECH OTHER	0	08/01/2006
C17793	CO ISSUED	0	05/01/2006
C17793	CO ISSUED	0	05/01/2006

SALES DATA

OFF RECORD Number	DATE	TYPE INST	Q / U	V / I	RSN CD	SALE PRICE
2285/1611	6/28/2019	WD	Q	I	01	517,500
GRANTOR: SUMMERLIN MARK R & AN						
GRANTEE: GREGORY A PETER & R						
1344/1309	8/24/2005	WD	Q	V		90,000
GRANTOR: ADAMS HERBERT & GLORI						
GRANTEE: SUMMERLIN MARK R &						

BUILDING NOTES

EXTRA FEATURES

LN	OB/XF CODE	DESCRIPTION	BLD	CAP	L	W	UNITS	UT	Adj R	ADJ UNIT PRICE	ORIG COND	YEAR ON	YEAR ACTUAL	Q	% COND	OB/XF MKT VALUE	NOTES
1	0500	FP-PRE FAB	0	100	0	0	1.00	UT	3,500.00	3,500.00	100	2007	2007	3	90	3,150	
2	0812	CONCRETE C	0	100	0	0	2,068.00	SF	4.00	4.00	100	2007	2007	3	87	7,197	
3	0911	SCRN RM A	0	100	31	45	1,395.00	SF	17.50	17.50	100	2008	2008	3	31	7,568	
4	0861	POOL GUNIT	0	100	0	0	448.00	SF	85.00	85.00	100	2008	2008	3	48	18,278	
5	0855	CONC PAVER	0	100	0	0	947.00	SF	10.00	10.00	100	2008	2008	3	88	8,334	

BUILDING DIMENSIONS

FGR=[YR=2007] W6 BAS=[YR=2007] W10 FOP=[YR=2007] N8 W44 S8 E25 U2 R2 E8 D2 R2 E7 $ W7 U2 L2 W8 D2 L2 W36 S38 E8 FOP=[YR=2007] S6 E20 STR=[YR=2018] S3 E8 N3 W8$ E24 N9 W4 S3 W40 $ E40 N29 E17 N9$ S9 W17 S26 E8 S3 E12 N3 E3 N35 $ PTR=E30 FUS=[YR=2007] E16 N3 E8 N14 E12 S9 E23 S17 W23 S11 W12 N11 STR=[YR=2018] W3 N9 E3 S9$ N9 W3 S9 W4 S11 W13 N14 W4 N6 $ W30 $.

LAND DESCRIPTION

TOTAL OB/XF 44,527

LN	USE CODE	CLS	LAND USE DESCRIPTION	CAP	RD	LOC ZONE	FRONT	DEPTH	TOT LND UTS	UNIT TYPE	DT	DPTH FACT	% COND	TOT ADJ	UNIT PRICE	ADJ UNIT PRICE	LAND VALUE	OTHER ADJUSTMENTS AND NOTES	YEAR	DENSITY	DECL	FRZ	YR	CONSRV
1	000100	C	RES	100		RSF-1	0.00	0.00	1.00	LT		1.00	1.00	1.00	125,000.00	125,000.00	125,000							

REVIEW DATE 05/12/2019 BY KBA Total Acres: 0.00 Total Land Value: 125,000 Market: 0 Agricultural: 0 Common: 125,000 PRINTED 07/30/2025 BY SYS