LOT 14
LANCEFORD PB 6/356

MICHAEL DAVID B/JABKOWSKI-MICHAEL AUDRIE ANN
6773 TIMBERLAKE SHORES ROAD
ELLSWORTH, MI 49729

2025

45-3N-28-121L-0014-0000

NASSAU COUNTY PROPERTY

BUILDING CHARACTERISTICS

ELEMENT	CD	CONSTRUCTION
Exterior Wall	16	WD FR STUC 100
Roof Structur	03	GABLE/HIP 100
Roof Cover	03	COMP SHNGL 100
Interior Wall	05	DRYWALL 100
Interior Floo	11	CLAY TILE 60
Interior Floo	12	HARDWOOD 40
Air Condition	03	CENTRAL 100
Heating Type	04	AIR DUCTED 100
Bedrooms		6 100
Bathrooms		5 100
Frame	02	WOOD FRAME 100
Stories	2.	2. 100
Units		0 100
Occupancy	00	NONE 100
Quality	04	Quality Level 04

DOR CODE 0100 SINGLE FAMILY
MAP NUM | MKT AREA 04
NEIGHBORHOOD/LOC 4026.00

AREA TYPE	TOTAL GROSS AREA	PCT OF BASE	YEAR	TOT ADJ AREA	SUBAREA MARKET VALUE
BAL	180	15	2005	27	3,570
BAS	2,055	100	2005	2,055	271,751
FGR	816	55	2005	449	59,375
FOP	70	30	2005	21	2,777
FOP	140	30	2005	42	5,554
FUS	1,632	100	2005	1,632	215,814
TOTALS	4,893			4,226	558,840

MARKET ADJUSTMENTS

TYPE	MDL	EFF. AREA	TOT ADJ PTS	EFF. BASE RATE	REPL. COST NEW	AYB	EYB	ECON	FNCT		NORM	% COND
0900	01	4,226	110.6952	146.12	617,503	2005	2005	0	0	0	9.50	90.50

1 SNGL FAM – 0% - 2024 Heated Area: 3687 HX Base Yr

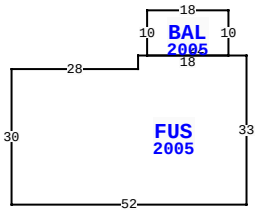

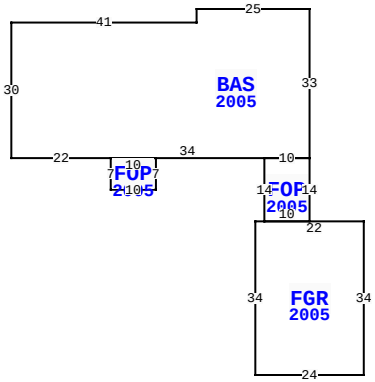

96266 DOWLING DR, YULEE

BLD DATE		LGL DATE	
XF DATE		LAND DATE	
INC DATE		AG DATE	

VALUATION SUMMARY

VALUATION BY	STANDARD
Tax Group: 4	Tax Dist:
BUILDING MARKET VALUE	558,840
TOTAL MARKET OB/XF VALUE	86,994
TOTAL LAND VALUE - MARKET	288,000
TOTAL MARKET VALUE	933,834
SOH/AGL Deduction	0
ASSESSED VALUE	933,834
TOTAL EXEMPTION VALUE	0
BASE TAXABLE VALUE	933,834
TOTAL JUST VALUE	933,834
NCON VALUE	39,300
INCOME VALUE	
PREVIOUS YEAR MKT VALUE	875,211

PERMIT NUM	DESCRIPTION	AMT	ISSUED
B2112510	SOLAR PANELS	114,474	09/17/2021
E2006124	CHNGE SRVC	0	07/01/2020
B1327183	WIND/DRS	15,000	05/01/2013
B16956	SCRN RM	10,365	12/01/2006
M09974	MECH OTHER	0	07/01/2005
P0509632	OTHER	0	06/01/2005

SALES DATA

OFF RECORD Number	DATE	TYPE INST	Q / U	V / I	RSN CD	SALE PRICE
2666/906	9/12/2023	WD	Q	I	02	1,123,000
GRANTOR: ANTHONY RONALD II & J						
GRANTEE: MICHAEL DAVID B						
2441/1719	3/11/2021	WD	Q	I	02	692,000
GRANTOR: DALEY NICHOLAS C & CA						
GRANTEE: ANTHONY RONALD II &						

BUILDING NOTES

BUILDING DIMENSIONS

BAS=[YR=2005] W25 S3 W41 S30 E22 FOP=[YR=2005] S7 E10 N7 W10$ E34 FOP=[YR=2005] S14 FGR=[YR=2005] W2 S34 E24 N34 W22$ E10 N14 W10$ E10 N33$ PTR=N20 FUS=[YR=2005] N30 E28 N3 E2 BAL=[YR=2005] N10 E18 S10 W18$ E22 S33 W52$ S20$.

EXTRA FEATURES

LN	OB/XF CODE	DESCRIPTION	BLD	CAP	L	W	UNITS	UT	Adj R	ADJ UNIT PRICE	ORIG COND	YEAR ON	YEAR ACTUAL	Q	% COND	OB/XF MKT VALUE	NOTES
1	0500	FP-PRE FAB	0	0	0	0	2.00	UT	3,500.00	3,500.00	100	2005	2005	3	88	6,160	
2	0871	POOL HTR R	0	0	0	0	1.00	UT	2,000.00	2,000.00	100	2005	2005	3	22	440	
3	0812	CONCRETE C	0	0	0	0	3,367.00	SF	4.00	4.00	100	2005	2005	3	84	11,313	
4	0911	SCRN RM A	0	0	41	31	1,271.00	SF	17.50	17.50	100	2005	2005	3	22	4,893	
5	0861	POOL GUNIT	0	0	0	0	594.00	SF	85.00	85.00	100	2005	2005	3	36	18,176	
6	0845	KOOL DECK	0	0	0	0	678.00	SF	7.25	7.25	100	2005	2005	3	84	4,129	
7	0830	FLAGSTONE	0	0	18	13	234.00	SF	12.00	12.00	100	2012	2012	3	92	2,583	
8	0322	BOAT LFT L	0	0	0	0	1.00	UT	1,500.00	1,500.00	100	2025	2024		100	1,500	
9	0300	BOAT DCK W	0	0	0	0	880.00	SF	40.00	40.00	100	2025	2024		100	35,200	
10	0350	CARPORT WD	0	0	20	10	200.00	SF	13.00	13.00	100	2025	2024		100	2,600	

TOTAL OB/XF 86,994

LAND DESCRIPTION

LN	USE CODE	CLS	LAND USE DESCRIPTION	CAP	RD	LOC ZONE	FRONT	DEPTH	TOT LND UTS	UNIT TYPE	DT	DPTH FACT	% COND	TOT ADJ	UNIT PRICE	ADJ UNIT PRICE	LAND VALUE	OTHER ADJUSTMENTS AND NOTES	YEAR	DENSITY	DECL	FRZ	YR	CONSRV
1	000116	C	RES MARSH	0		RSF-	1144.00	315.00	144.00	FF		1.00	1.00	1.00	2,000.00	2,000.00	288,000							

REVIEW DATE 04/27/2021 BY KWA Total Acres: 0.00 Total Land Value: 288,000 Market: 0 Agricultural: 0 Common: 288,000 PRINTED 07/30/2025 BY SYS