LOT 12
LANCEFORD PB 6/356

MATHIS MISTY B & MICHAEL B
96232 DOWLING DRIVE
YULEE, FL 32097

2025

45-3N-28-121L-0012-0000

NASSAU COUNTY PROPERTY

BUILDING CHARACTERISTICS

ELEMENT	CD	CONSTRUCTION
Exterior Wall	17	CB STUCCO 50
Exterior Wall	31	HARDIE BRD 50
Roof Structur	03	GABLE/HIP 100
Roof Cover	12	MODULAR MT 100
Interior Wall	05	DRYWALL 100
Interior Floo	12	HARDWOOD 70
Interior Floo	13	LVT/LAMNT 30
Air Condition	03	CENTRAL 100
Heating Type	04	AIR DUCTED 100
Bedrooms		4 100
Bathrooms		4 100
Frame	03	MASONRY 100
Stories	2.	2. 100
Units		0 100
Occupancy	00	NONE 100
Quality	04	Quality Level 04
DOR CODE	0100	SINGLE FAMILY
MAP NUM		MKT AREA 04
NEIGHBORHOOD/LOC	4026.00	

AREA TYPE	TOTAL GROSS AREA	PCT OF BASE	YEAR	TOT ADJ AREA	SUBAREA MARKET VALUE
BAS	1,296	100	2015	1,296	158,717
DCK	138	10	2006	14	1,715
FGR	1,050	55	2006	578	70,785
FOP	216	30	2006	65	7,961
FOP	216	30	2006	65	7,961
FOP	670	30	2006	201	24,616
FOP	670	30	2006	201	24,616
FUS	2,346	100	2006	2,346	287,307
PTO	90	5	2006	4	490
TOTALS	6,692			4,770	584,166

MARKET ADJUSTMENTS

TYPE	MDL	EFF. AREA	TOT ADJ PTS	EFF. BASE RATE	REPL. COST NEW	AYB	EYB	ECON	FNCT		NORM	% COND
0900	01	4,770	101.6778	134.21	640,182	2006	2006	0	0	0	8.75	91.25

1 SNGL FAM – 100% - 2021 Heated Area: 3642 HX Base Yr 2021

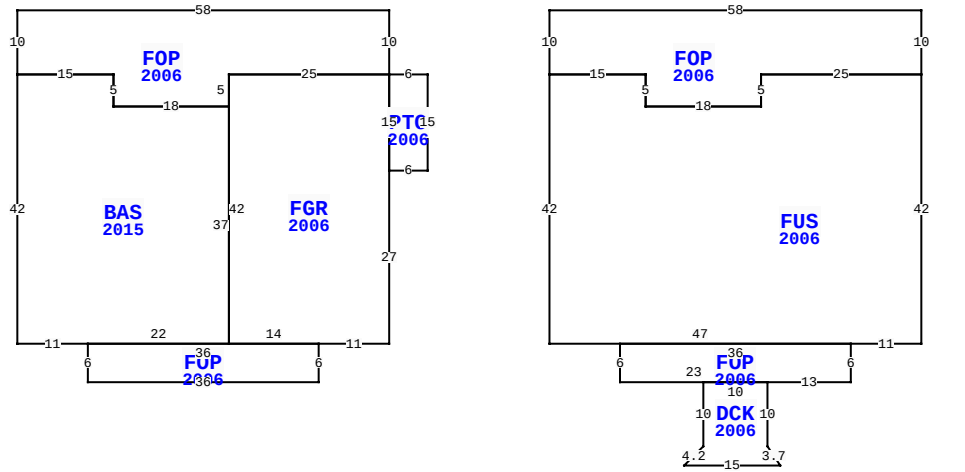

96232 DOWLING DR, YULEE

BLD DATE		LGL DATE	
XF DATE		LAND DATE	04/22/2024 MLU
INC DATE		AG DATE	

VALUATION SUMMARY

VALUATION BY		STANDARD
Tax Group: 4	Tax Dist:	
BUILDING MARKET VALUE		584,166
TOTAL MARKET OB/XF VALUE		65,000
TOTAL LAND VALUE - MARKET		218,000
TOTAL MARKET VALUE		867,166
SOH/AGL Deduction		229,994
ASSESSED VALUE		637,172
TOTAL EXEMPTION VALUE	HX HB	50,722
BASE TAXABLE VALUE		586,450
TOTAL JUST VALUE		867,166
NCON VALUE		0
INCOME VALUE		
PREVIOUS YEAR MKT VALUE		842,131

PERMIT NUM	DESCRIPTION	AMT	ISSUED
B1633149	SWIM POOL	30,000	09/01/2016
C16116	CO ISSUED	200,822	09/01/2005
E15791	ELEC OTHER	2,000	09/01/2005
M10333	TANKS/BLRS	0	09/01/2005
P10052	OTHER	0	09/01/2005
R08264	REPAIR/RRF	5,000	09/01/2005

SALES DATA

OFF RECORD Number	DATE	TYPE INST	Q / U	V / I	RSN CD	SALE PRICE
2339/0482	1/31/2020	WD	Q	I	02	610,000
GRANTOR: LOPER JAMES						
GRANTEE: MATHIS MISTY B & MI						
1324/0177	6/09/2005	WD	Q	V		200,000
GRANTOR: BLACKROCK DEVELOPMENT						
GRANTEE: LOPER JAMES & ANGEL						

BUILDING NOTES

BUILDING DIMENSIONS

FOP=[YR=2006] W58 S10 BAS=[YR=2015] S42 E11 FOP=[YR=2006] S6 E36 N6 FGR=[YR=2006] E11 N27 PTO=[YR=2006] E6 N15 W6 S15$ N15 W25 S42 E14$ W36$ E22 N37 W18 N5 W15$ E15 S5 E18 N5 E25 N10$ PTR=[YR=2006] E25 FOP=[YR=2006] E58 S10 FUS=[YR=2006] S42 W11 FOP=[YR=2006] S6 W13 DCK=[YR=2006] S10 D3 R2 W15 U3 R3 N10 E10$ W23 N6 E36$ W47 N42 E15 S5 E18 N5 E25$ W25 S5 W18 N5 W15 N10$ W25$.

EXTRA FEATURES

LN	OB/XF CODE	DESCRIPTION	BLD	CAP	L	W	UNITS	UT	Adj R	ADJ UNIT PRICE	ORIG COND	YEAR ON	YEAR ACTUAL	Q	% COND	OB/XF MKT VALUE	NOTES
1	0855	CONC PAVER	0	100	0	0	1,880.00	SF	10.00	10.00	100	2006	2006	3	86	16,168	
2	0300	BOAT DCK W	0	100	0	0	932.00	SF	40.00	40.00	100	2006	2006	3	40	14,912	
3	1124	CB/STC 4"	0	100	0	0	105.00	SF	6.50	6.50	100	2006	2006	3	86	587	
4	0752	USP	0	100	10	8	80.00	SF	15.00	15.00	100	2012	2012	3	64	768	
5	0310	AL GANG WY	0	100	0	0	15.00	LF	115.00	115.00	100	2012	2012	3	50	863	
6	0303	FLT DOCK W	0	100	12	6	72.00	SF	26.00	26.00	100	2012	2012	3	64	1,198	
7	0861	POOL GUNIT	0	100	28	13	364.00	SF	85.00	85.00	100	2017	2017	3	81	25,061	
8	0855	CONC PAVER	0	100	0	0	567.00	SF	10.00	10.00	100	2017	2017	3	96	5,443	

LAND DESCRIPTION

TOTAL OB/XF 65,000

LN	USE CODE	CLS	LAND USE DESCRIPTION	CAP	RD	LOC ZONE	FRONT	DEPTH	TOT LND UTS	UNIT TYPE	DT	DPTH FACT	% COND	TOT ADJ	UNIT PRICE	ADJ UNIT PRICE	LAND VALUE	OTHER ADJUSTMENTS AND NOTES	YEAR	DENSITY	DECL	FRZ	YR	CONSRV
1	000116	C	RES MARSH	100		RSF-	1109.00	280.00	109.00	FF		1.00	1.00	1.00	2,000.00	2,000.00	218,000							

REVIEW DATE 09/20/2023 BY DJA Total Acres: 0.00 Total Land Value: 218,000 Market: 0 Agricultural: 0 Common: 218,000 PRINTED 07/30/2025 BY SYS