LOT 13
CAPTAINS POINTE PB 7/109

GIGUERE ASHLEY/DELSELVA EVAN
96214 CAPTAINS POINTE ROAD
YULEE, FL 32097

2025

45-3N-28-0240-0013-0000

NASSAU COUNTY PROPERTY

BUILDING CHARACTERISTICS

ELEMENT	CD	CONSTRUCTION
Exterior Wall	16	WD FR STUC 100
Roof Structur	08	IRREGULAR 100
Roof Cover	03	COMP SHNGL 100
Interior Wall	05	DRYWALL 100
Interior Floo	13	LVT/LAMNT 70
Interior Floo	11	CLAY TILE 30
Air Condition	03	CENTRAL 100
Heating Type	04	AIR DUCTED 100
Bedrooms		4 100
Bathrooms		5.5 100
Frame	02	WOOD FRAME 100
Stories	1.	1. 100
Units		0 100
Occupancy	00	NONE 100
Quality	04	Quality Level 04
DOR CODE	0100	SINGLE FAMILY
MAP NUM		MKT AREA 04
NEIGHBORHOOD/LOC	4027.00	

AREA TYPE	TOTAL GROSS AREA	PCT OF BASE	YEAR	TOT ADJ AREA	SUBAREA MARKET VALUE
BAS	80	100	2012	80	11,536
BAS	2,562	100	2012	2,562	369,430
FGR	849	55	2012	467	67,340
FOP	64	30	2012	19	2,740
FOP	510	30	2012	153	22,062
TOTALS	4,065			3,281	473,107

MARKET ADJUSTMENTS

TYPE	MDL	EFF. AREA	TOT ADJ PTS	EFF. BASE RATE	REPL. COST NEW	AYB	EYB	ECON	FNCT		NORM	% COND
0900	01	3,281	116.2098	153.40	503,305	2012	2012	0	0	0	6.00	94.00

1 SNGL FAM – 100% - 2018 Heated Area: 2642 HX Base Yr 2018

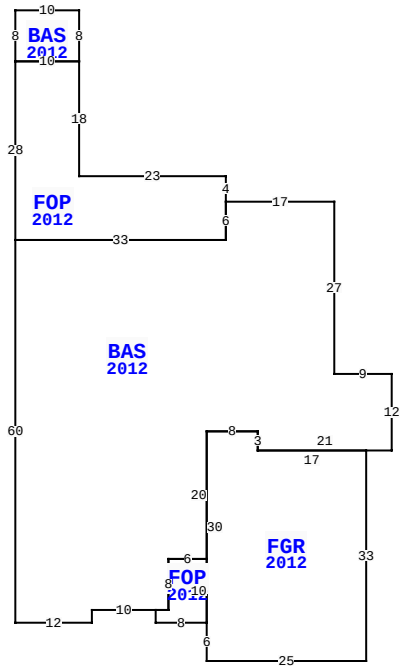

96214 CAPTAINS POINTE RD, YULEE

BLD DATE		LGL DATE	
XF DATE		LAND DATE	05/01/2025 MLU
INC DATE		AG DATE	

VALUATION SUMMARY

VALUATION BY		STANDARD
Tax Group: 4	Tax Dist:	
BUILDING MARKET VALUE		473,107
TOTAL MARKET OB/XF VALUE		49,875
TOTAL LAND VALUE - MARKET		125,000
TOTAL MARKET VALUE		647,982
SOH/AGL Deduction		270,504
ASSESSED VALUE		377,478
TOTAL EXEMPTION VALUE	WR HX HB	55,722
BASE TAXABLE VALUE		321,756
TOTAL JUST VALUE		647,982
NCON VALUE		0
INCOME VALUE		
PREVIOUS YEAR MKT VALUE		607,806

PERMIT NUM	DESCRIPTION	AMT	ISSUED
C1226146	CO ISSUED	0	11/26/2012
E25365	ELEC OTHER	0	08/01/2012
B26186	SWIM POOL	35,900	07/01/2012
E25189	TEMP POLE	0	06/01/2012
B26146	NEW CONSTR	310,095	06/01/2012

SALES DATA

OFF RECORD Number	DATE	TYPE INST	Q / U	V / I	RSN CD	SALE PRICE
2797/1200	6/30/2025	WD	Q	I	01	700,000
GRANTOR: FLORENCE BRUCE E						
GRANTEE: GIGUERE ASHLEY						
2686/447	12/20/2023	QC	U	I	11	100
GRANTOR: FLORENCE BRUCE E						
GRANTEE: FLORENCE BRUCE E						

BUILDING NOTES

BUILDING DIMENSIONS

BAS=[YR=2012] W9 N27 W17 FOP=[YR=2012] N4 W23 N18
BAS=[YR=2012] N8 W10 S8 E10 $ W10 S28 E33 N6 $ S6 W33 S60
E12 N2 E10 FOP=[YR=2012] S2 E8 FGR=[YR=2012] S6 E25 N33 W17
N3 W8 S30 $ N10 W6 S8 W2 $ E2 N8 E6 N20 E8 S3 E21 N12 $.

EXTRA FEATURES

LN	OB/XF CODE	DESCRIPTION	BLD	CAP	L	W	UNITS	UT	Adj R	ADJ UNIT PRICE	ORIG COND	YEAR ON	YEAR ACTUAL	Q	% COND	OB/XF MKT VALUE	NOTES
1	0811	CONCRETE B	0	100	0	0	2,279.00	SF	5.20	5.20	100	2012	2012	3	92	10,903	
2	0911	SCRN RM A	0	100	0	0	788.00	SF	17.50	17.50	100	2012	2012	3	50	6,895	
3	0861	POOL GUNIT	0	100	0	0	432.00	SF	85.00	85.00	100	2012	2012	3	64	23,501	
4	0845	KOOL DECK	0	100	0	0	356.00	SF	7.25	7.25	100	2012	2012	3	92	2,375	
5	0463	FENCE GATE	0	100	0	0	1.00	UT	300.00	300.00	100	2015	2015	3	87	261	
6	0462	ST/AL FNC	0	100	198	0	792.00	SF	10.00	10.00	100	2015	2015	3	75	5,940	

LAND DESCRIPTION

TOTAL OB/XF 49,875

LN	USE CODE	CLS	LAND USE DESCRIPTION	CAP	RD	LOC ZONE	FRONT	DEPTH	TOT LND UTS	UNIT TYPE	DT	DPTH FACT	% COND	TOT ADJ	UNIT PRICE	ADJ UNIT PRICE	LAND VALUE	OTHER ADJUSTMENTS AND NOTES	YEAR	DENSITY	DECL	FRZ	YR	CONSRV
1	000134	C	RES POND	100		RSF-1	0.00	0.00	1.00	LT		1.00	1.00	1.00	125,000.00	125,000.00	125,000							

REVIEW DATE 02/14/2023 BY NWA Total Acres: 0.00 Total Land Value: 125,000 Market: 0 Agricultural: 0 Common: 125,000 PRINTED 07/30/2025 BY SYS