LOTS 5 & 6
HOLLY POINT EST PB 7/28

BYBEE JOHN H & VELMA ANNE LANIGAN
940134 OLD NASSAUVILLE RD
FERNANDINA BEACH, FL 32034

2025

45-2N-28-0785-0006-0000

BUILDING CHARACTERISTICS

ELEMENT	CD	CONSTRUCTION
Exterior Wall	16	WD FR STUC 100
Roof Structur	08	IRREGULAR 100
Roof Cover	03	COMP SHNGL 100
Interior Wall	05	DRYWALL 100
Interior Floo	12	HARDWOOD 60
Interior Floo	14	CARPET 40
Air Condition	03	CENTRAL 100
Heating Type	04	AIR DUCTED 100
Bedrooms		4 100
Bathrooms		3 100
Frame	02	WOOD FRAME 100
Stories	0	0 100
Units		0 100
Occupancy	00	NONE 100
Quality	03	Quality Level 03

DOR CODE	0100	SINGLE FAMILY	
MAP NUM		MKT AREA	04
NEIGHBORHOOD/LOC	4005.00		

AREA TYPE	TOTAL GROSS AREA	PCT OF BASE	YEAR	TOT ADJ AREA	SUBAREA MARKET VALUE
BAS	3,032	100	2015	3,032	461,147
FGR	792	55	2015	436	66,312
FGR	400	55	2020	220	33,460
FOP	313	30	2015	94	14,296
FOP	557	30	2015	167	25,399
TOTALS	5,094			3,949	600,617

MARKET ADJUSTMENTS

TYPE	MDL	EFF. AREA	TOT ADJ PTS	EFF. BASE RATE	REPL. COST NEW	AYB	EYB	ECON	FNCT		NORM	% COND
0500	01	3,949	100.8000	159.26	628,918	2015	2015	0	0	0	4.50	95.50

1 SFR CUST – 100% - 2020 Heated Area: 3032 HX Base Yr 2020

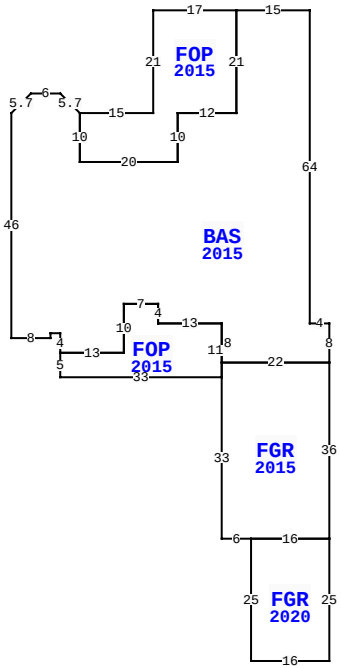

940134 OLD NASSAUVILLE RD, FERNANDINA BEACH

BLD DATE		LGL DATE	
XF DATE		LAND DATE	05/09/2025 MLU
INC DATE		AG DATE	

NASSAU COUNTY PROPERTY

PAGE 1 of 1 4

VALUATION SUMMARY

VALUATION BY		STANDARD
Tax Group: 4	Tax Dist:	
BUILDING MARKET VALUE		600,617
TOTAL MARKET OB/XF VALUE		17,062
TOTAL LAND VALUE - MARKET		658,800
TOTAL MARKET VALUE		1,276,479
SOH/AGL Deduction		509,525
ASSESSED VALUE		766,954
TOTAL EXEMPTION VALUE	HX HB	50,722
BASE TAXABLE VALUE		716,232
TOTAL JUST VALUE		1,276,479
NCON VALUE		0
INCOME VALUE		
PREVIOUS YEAR MKT VALUE		941,066

PERMIT NUM	DESCRIPTION	AMT	ISSUED
B1911547	GARAGE ADDTN	19,320	11/04/2019
B1428731	CO ISSUED	0	05/14/2015
B1428731	NEW CONSTR	389,475	05/01/2014

SALES DATA

OFF RECORD Number	DATE	TYPE INST	Q / U	V / I	RSN CD	SALE PRICE
2515/0399	11/16/2021	WD	Q	V	03	175,000
GRANTOR: LOPER JAMES						
GRANTEE: BYBEE JOHN H & ANNE						
2275/1053	5/20/2019	WD	Q	I	02	560,500
GRANTOR: BERGHOEFER JOYCE L LV						
GRANTEE: BYBEE JOHN H & VELM						

BUILDING NOTES

BUILDING DIMENSIONS

BAS=[YR=2015] W4 N64 W15 FOP=[YR=2015] W17 S21 W15 S10 E20 N10 E12 N21$ S21 W12 S10 W20 N10 U4 L4 W6 D4 L4 S46 E8 N1 E2 S4 FOP=[YR=2015] S5 E33 FGR=[YR=2015] S33 E6 FGR=[YR=2020] S25 E16 N25 W16$ E16 N36 W22 S3$ N11 W13 N4 W7 S10 W13$ E13 N10 E7 S4 E13 S8 E22 N8$.

EXTRA FEATURES

L N	OB/XF CODE	DESCRIPTION	BLD	CAP	L	W	UNITS	UT	Adj R	ADJ UNIT PRICE	ORIG COND	YEAR ON	YEAR ACTUAL	Q	% COND	OB/XF MKT VALUE	NOTES
1	0812	CONCRETE C	0	100	0	0	1,640.00	SF	4.00	4.00	100	2015	2015	3	95	6,232	
2	0855	CONC PAVER	0	100	0	0	1,140.00	SF	10.00	10.00	100	2015	2015	3	95	10,830	

LAND DESCRIPTION

TOTAL OB/XF 17,062

L N	USE CODE	CLS	LAND USE DESCRIPTION	CAP	R D	LOC ZONE	FRONT	DEPTH	TOT LND UTS	UNIT TYPE	D T	DPTH FACT	% COND	TOT ADJ	UNIT PRICE	ADJ UNIT PRICE	LAND VALUE	OTHER ADJUSTMENTS AND NOTES	YEAR	DENSITY	DECL	FRZ	YR	CONSRV
1	000131	C	RES CREEK	100		RSF-1	90.00	280.00	90.00	FF		1.00	1.00	0.90	4,000.00	3,600.00	324,000							
2	000131	C	RES CREEK	100		RSF-1	93.00	315.00	93.00	FF		1.00	1.00	0.90	4,000.00	3,600.00	334,800							

REVIEW DATE 06/02/2022 BY KWX Total Acres: 0.00 Total Land Value: 658,800 Market: 0 Agricultural: 0 Common: 658,800 PRINTED 07/30/2025 BY SYS