IN OR 2056/769
A/K/A LOTS 13 & 14 UNR SUB

MANGANARO FAMILY TRUST/MANGANARO MARIO P TRUSTEE
96686 BLACKROCK RD
YULEE, FL 32097

2025

44-3N-28-0000-0001-0130

BUILDING CHARACTERISTICS

ELEMENT	CD	CONSTRUCTION
Exterior Wall	19	COMMON BRK 80
Exterior Wall	05	AVERAGE 20
Roof Structur	03	GABLE/HIP 100
Roof Cover	03	COMP SHNGL 100
Interior Wall	04	PLYWOOD 100
Interior Floo	14	CARPET 80
Interior Floo	10	TERRAZZO 20
Air Condition	03	CENTRAL 100
Heating Type	04	AIR DUCTED 100
Bedrooms		3 100
Bathrooms		3 100
Frame	02	WOOD FRAME 100
Stories	1.	1. 100
Units		0 100
BUD8 Adjustme	04	DIST 01 100
Occupancy	00	NONE 100
Quality	01	Quality Level 01

DOR CODE 0100 SINGLE FAMILY
MAP NUM | MKT AREA 04
NEIGHBORHOOD/LOC 4031.00

AREA TYPE	TOTAL GROSS AREA	PCT OF BASE	YEAR	TOT ADJ AREA	SUBAREA MARKET VALUE
BAS	2,634	100	1993	2,634	274,936
FCP	392	25	2007	98	10,230
FGR	644	55	1993	354	36,951
FOP	36	30	1993	11	1,148
UST	392	45	2007	176	18,371
TOTALS	4,098			3,273	341,636

MARKET ADJUSTMENTS

TYPE	MDL	EFF. AREA	TOT ADJ PTS	EFF. BASE RATE	REPL. COST NEW	AYB	EYB	ECON	FNCT		NORM	% COND
0900	01	3,273	99.0288	130.72	427,847	1978	1998	0	0	0	20.15	79.85

1 SNGL FAM – 100% - 1989 Heated Area: 2634 HX Base Yr 1989

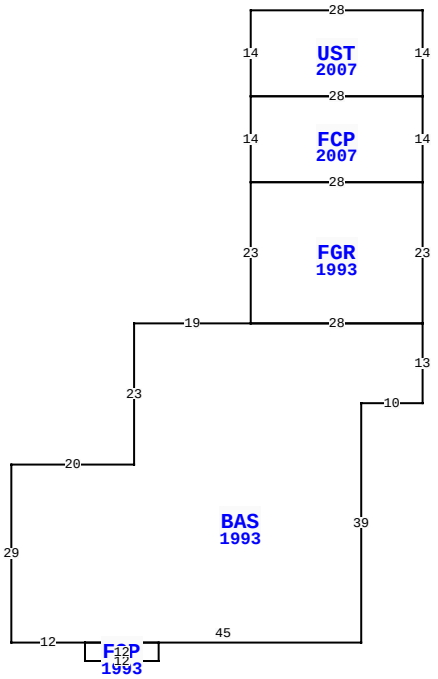

96686 BLACKROCK RD, YULEE

BLD DATE		LGL DATE	
XF DATE		LAND DATE	04/14/2025 MLU
INC DATE		AG DATE	

NASSAU COUNTY PROPERTY

PAGE 1 of 1 4

VALUATION SUMMARY

VALUATION BY		STANDARD
Tax Group: 4	Tax Dist:	
BUILDING MARKET VALUE		341,636
TOTAL MARKET OB/XF VALUE		26,518
TOTAL LAND VALUE - MARKET		187,500
TOTAL MARKET VALUE		555,654
SOH/AGL Deduction		352,927
ASSESSED VALUE		202,727
TOTAL EXEMPTION VALUE	HX HB	50,722
BASE TAXABLE VALUE		152,005
TOTAL JUST VALUE		555,654
NCON VALUE		0
INCOME VALUE		
PREVIOUS YEAR MKT VALUE		415,221

PERMIT NUM	DESCRIPTION	AMT	ISSUED
M1703440	H/AC	0	06/01/2017
2950	REMODEL	3,600	02/09/1988
4651	ADDITION	0	02/09/1988
4796	REMODEL	1,200	02/09/1988

SALES DATA

OFF RECORD Number	DATE	TYPE INST	Q / U	V / I	RSN CD	SALE PRICE
2056/0769	6/28/2016	WD	U	I	11	100

GRANTOR: MANGANARO MARIO P & R
GRANTEE: MANGANARO FAMILY TR

0520/0784	6/22/1987	WD	Q	I		65,000

GRANTOR: CADY CHARLES JR & E
GRANTEE: MANGANARO MARIO & R

BUILDING NOTES

BUILDING DIMENSIONS

UST=[YR=2007] W28 S14 FCP=[YR=2007] S14 FGR=[YR=1993] S23
BAS=[YR=1993] W19 S23 W20 S29 E12 FOP=[YR=1993] S3 E12 N3
W12$ E45 N39 E10 N13 W28$ E28 N23 W28$ E28 N14 W28$ E28 N14$
.

EXTRA FEATURES

LN	OB/XF CODE	DESCRIPTION	BLD	CAP	L	W	UNITS	UT	Adj R	ADJ UNIT PRICE	ORIG COND	YEAR ON	YEAR ACTUAL	Q	% COND	OB/XF MKT VALUE	NOTES
1	0812	CONCRETE C	0	100	175	14	2,450.00	SF	4.00	4.00	100	1985	1985	3	44	4,312	
2	0500	FP-PRE FAB	0	100	0	0	1.00	UT	3,500.00	3,500.00	100	1985	1985	3	56	1,960	
3	0810	CONCRETE A	0	100	3	12	36.00	SF	6.50	6.50	100	1980	1980	3	30	70	
4	0811	CONCRETE B	0	100	0	0	954.00	SF	5.20	5.20	100	1980	1980	3	30	1,488	
5	0500	FP-PRE FAB	0	100	0	0	1.00	UT	2,345.00	2,345.00	100	1987	1987	3	60	1,407	
6	0866	POOL FIBER	0	100	18	38	684.00	SF	72.00	72.00	100	1995	1995	3	20	9,850	
7	0845	KOOL DECK	0	100	0	0	650.00	SF	7.25	7.25	100	1995	1995	3	68	3,205	
8	0812	CONCRETE C	0	100	0	0	1,100.00	SF	4.00	4.00	100	1996	1996	3	70	3,080	
9	1121	CB 4"	0	100	0	0	1,310.00	SF	1.25	1.25	100	1996	1996	3	70	1,146	

LAND DESCRIPTION

TOTAL OB/XF 26,518

LN	USE CODE	CLS	LAND USE DESCRIPTION	CAP	RD	LOC ZONE	FRONT	DEPTH	TOT LND UTS	UNIT TYPE	DT	DPTH FACT	% COND	TOT ADJ	UNIT PRICE	ADJ UNIT PRICE	LAND VALUE	OTHER ADJUSTMENTS AND NOTES	YEAR	DENSITY	DECL	FRZ	YR	CONSRV
1	000100	C	RES	100		RSF-1	0.00	0.00	2.00	LT		1.00	1.00	0.75	125,000.00	93,750.00	187,500							

REVIEW DATE 05/12/2019 BY KBA Total Acres: 1.00 Total Land Value: 187,500 Market: 0 Agricultural: 0 Common: 187,500 PRINTED 07/30/2025 BY SYS