PT JOHN BELLANY GRANT
SEC 44-3N-26E IN DBK 75/78,
DBK 178/211 & OR 605/316

CHURCH OF GOD BY FAITH
C/O ERVING GILYARD, 153091 CR 108
YULEE, FL 32097

2025

44-3N-26-0000-0002-0000

NASSAU COUNTY PROPERTY

BUILDING CHARACTERISTICS

ELEMENT	CD	CONSTRUCTION
Exterior Wall	17	CB STUCCO 100
Roof Structur	03	GABLE/HIP 100
Roof Cover	01	MINIMUM 100
Interior Wall	03	PLASTER 100
Interior Floo	14	CARPET 100
Ceiling	01	FIN.SUSPD 100
Air Condition	03	CENTRAL 100
Heating Type	04	AIR DUCTED 100
Fixtures		7 100
Frame	03	MASONRY 100
Story Height		8 100
RMS		2 100
Stories	0	0 100
Units		0 100
BUD8 Adjustme	04	DIST 01 100
Occupancy	00	NONE 100
Quality	03	Quality Level 03
DOR CODE	7100	CHURCHES
MAP NUM		MKT AREA 05
NEIGHBORHOOD/LOC	5001.00	

AREA TYPE	TOTAL GROSS AREA	PCT OF BASE	YEAR	TOT ADJ AREA	SUBAREA MARKET VALUE
BAS	3,559	100	1993	3,559	185,056
FOP	50	30	1993	15	780
FOP	72	30	1993	22	1,144
STP	24	10	2014	2	104
STP	98	10	2014	10	520
UOP	40	20	1993	8	416
TOTALS	3,843			3,616	188,020

MARKET ADJUSTMENTS

TYPE	MDL	EFF. AREA	TOT ADJ PTS	EFF. BASE RATE	REPL. COST NEW	AYB	EYB	ECON	FNCT		NORM	% COND
7102	04	3,616	87.1380	96.29	348,185	1960	1970	0	0	0	46.00	54.00

1 EDU RELGUS – 0% - 0 Heated Area: 3559 HX Base Yr

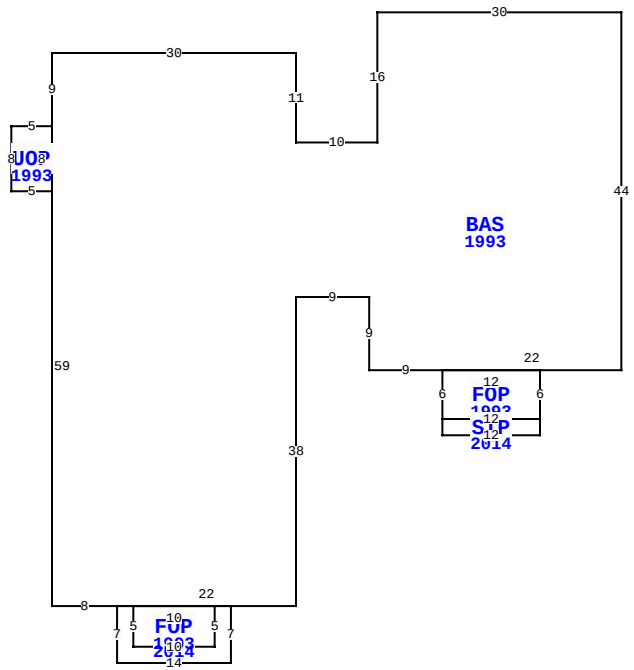

153091 CR 108, YULEE

BLD DATE		LGL DATE	
XF DATE		LAND DATE	05/19/2023 MLU
INC DATE		AG DATE	

NASSAU COUNTY PROPERTY — VALUATION SUMMARY

VALUATION BY		STANDARD
Tax Group: 4	Tax Dist:	
BUILDING MARKET VALUE		188,020
TOTAL MARKET OB/XF VALUE		895
TOTAL LAND VALUE - MARKET		17,100
TOTAL MARKET VALUE		206,015
SOH/AGL Deduction		15,598
ASSESSED VALUE		190,417
TOTAL EXEMPTION VALUE	02	190,417
BASE TAXABLE VALUE		0
TOTAL JUST VALUE		206,015
NCON VALUE		0
INCOME VALUE		
PREVIOUS YEAR MKT VALUE		213,453

PERMIT NUM	DESCRIPTION	AMT	ISSUED
21013297	RE-ROOF	13,500	09/29/2021
B22992	REPAIR/RRF	2,450	11/01/2009
R991978	REPAIR/RRF	5,000	09/01/1999
7666	ADDITION	41,100	11/06/1991

SALES DATA

OFF RECORD Number	DATE	TYPE INST	Q / U	V / I	RSN CD	SALE PRICE
0605/0316	5/25/1990	SW	U	V	17	100
GRANTOR: VANZANT HURBERT N ETA						
GRANTEE: CHURCH OF GOD BY FA						
0178/0211	5/04/1950	SW	U	I	17	100
GRANTOR: OWENS L L JR & JENNIE						
GRANTEE: CHURCH OF GOD BY FA						

BUILDING NOTES

BUILDING DIMENSIONS

BAS=[YR=1993] W30 S16 W10 N11 W30 S9 UOP=[YR=1993] W5 S8 E5 N8$ S59 E8 STP=[YR=2014] S7 E14 N7 W2 FOP=[YR=1993] S5 W10 N5 E10$ W12$ E22 N38 E9 S9 E9 FOP=[YR=1993] S6 STP=[YR=2014] S2 E12 N2 W12$ E12 N6 W12$ E22 N44 $.

EXTRA FEATURES

LN	OB/XF CODE	DESCRIPTION	BLD	CAP	L	W	UNITS	UT	Adj R	ADJ UNIT PRICE	ORIG COND	YEAR ON	YEAR ACTUAL	Q	% COND	OB/XF MKT VALUE	NOTES
1	0810	CONCRETE A	0	0	0	0	222.00	SF	6.50	6.50	100	1992	1992	3	62	895	

LAND DESCRIPTION

TOTAL OB/XF 895

LN	USE CODE	CLS	LAND USE DESCRIPTION	CAP	RD	LOC ZONE	FRONT	DEPTH	TOT LND UTS	UNIT TYPE	DT	DPTH FACT	% COND	TOT ADJ	UNIT PRICE	ADJ UNIT PRICE	LAND VALUE	OTHER ADJUSTMENTS AND NOTES	YEAR	DENSITY	DECL	FRZ	YR	CONSRV
1	007100	C	CHURCH	0		OR	0.00	0.00	0.38	AC		1.00	1.00	1.00	45,000.00	45,000.00	17,100							

REVIEW DATE 07/10/2020 BY KBA Total Acres: 0.38 Total Land Value: 17,100 Market: 0 Agricultural: 0 Common: 17,100 PRINTED 07/30/2025 BY SYS