BLK B (K/A PARCEL B} LOT 4
WILDERS SUB OF NASSAU RIVER
FRONTAGE PBK 2/67

KUTZLEB MICHAEL KEITH & CLAUDIA DEBORAH
95714 WILDER BLVD
FERNANDINA BEACH, FL 32034

2025

44-2N-28-5200-0004-0000

NASSAU COUNTY PROPERTY

BUILDING CHARACTERISTICS

ELEMENT	CD	CONSTRUCTION
Exterior Wall	16	WD FR STUC 100
Roof Structur	08	IRREGULAR 100
Roof Cover	03	COMP SHNGL 100
Interior Wall	05	DRYWALL 100
Interior Floo	12	HARDWOOD 60
Interior Floo	11	CLAY TILE 40
Air Condition	03	CENTRAL 100
Heating Type	04	AIR DUCTED 100
Bedrooms		3 100
Bathrooms		4 100
Frame	02	WOOD FRAME 100
Stories	2.	2. 100
Units		0 100
Quality	05	Quality Level 05
DOR CODE	0100	SINGLE FAMILY
MAP NUM		MKT AREA 04
NEIGHBORHOOD/LOC	4009.00	

AREA TYPE	TOTAL GROSS AREA	PCT OF BASE	YEAR	TOT ADJ AREA	SUBAREA MARKET VALUE
BAS	1,820	100	2004	1,820	366,109
FCB	154	30	2004	46	9,253
FGR	500	55	2004	275	55,319
FOP	140	30	2004	42	8,448
FOP	192	30	2004	58	11,668
FOP	240	30	2004	72	14,484
FUS	1,786	100	2004	1,786	359,270
UOP	80	20	2004	16	3,218
TOTALS	4,912			4,115	827,770

MARKET ADJUSTMENTS

TYPE	MDL	EFF. AREA	TOT ADJ PTS	EFF. BASE RATE	REPL. COST NEW	AYB	EYB	ECON	FNCT		NORM	% COND
0500	11	4,115	141.4618	223.51	919,744	2004	2004	0	0	0	10.00	90.00

1 SFR CUST – 100% - 2021 Heated Area: 3652 HX Base Yr 2021

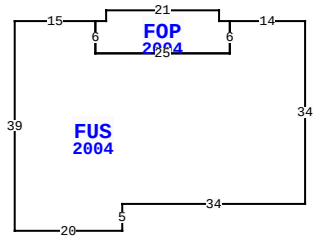

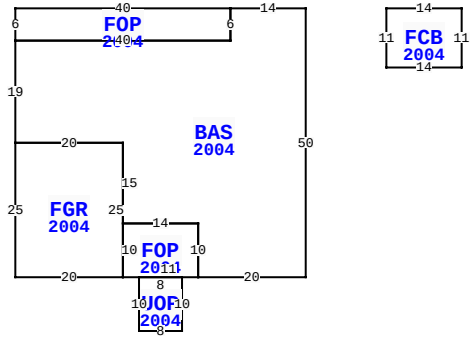

95714 WILDER BLVD, FERNANDINA BEACH

BLD DATE		LGL DATE	
XF DATE		LAND DATE	05/09/2025 MLU
INC DATE		AG DATE	

NASSAU COUNTY PROPERTY — VALUATION SUMMARY

VALUATION BY		STANDARD
Tax Group: 4	Tax Dist:	
BUILDING MARKET VALUE		827,770
TOTAL MARKET OB/XF VALUE		156,253
TOTAL LAND VALUE - MARKET		800,000
TOTAL MARKET VALUE		1,784,023
SOH/AGL Deduction		731,242
ASSESSED VALUE		1,052,781
TOTAL EXEMPTION VALUE	HX HB	50,722
BASE TAXABLE VALUE		1,002,059
TOTAL JUST VALUE		1,784,023
NCON VALUE		0
INCOME VALUE		
PREVIOUS YEAR MKT VALUE		1,703,919

PERMIT NUM	DESCRIPTION	AMT	ISSUED
B240009040	FGR ADD	26,959	08/02/2024
G2003431	GAS PIPING/ FIXTU	0	04/22/2020
B1806748	FOUNDATION REPAIR	18,515	06/29/2018
M1521609	H/AC	0	08/13/2015
B1413202	CABANA W/ SUMMER	25,000	07/14/2004
B98-5253	TEMP POLE	0	09/01/1998

SALES DATA

OFF RECORD Number	DATE	TYPE INST	Q / U	V / I	RSN CD	SALE PRICE
2285/0600	6/26/2019	WD	U	I	37	1,600,000
GRANTOR: VOSS CINDY L & FREDER						
GRANTEE: KUTZLEB MICHAEL KEI						
0962/0659	12/15/2000	WD	U	I		215,000
GRANTOR: WALDING JOE						
GRANTEE: VOSS CINDY L & FRED						

BUILDING NOTES

BUILDING DIMENSIONS

BAS=[YR=2004] W14 FOP=[YR=2004] W40 S6 E40 N6$ S6 W40 S19 FGR=[YR=2004] S25 E20 FOP=[YR=2004] E3 UOP=[YR=2004] S10 E8 N10 W8$ E11 N10 W14 S10$ N25 W20$ E20 S15 E14 S10 E20 N50$ PTR= N20 FUS=[YR=2004] N39 E15 FOP=[YR=2004] E2 N2 E21 S2 E2 S6 W25 N6$ S6 E25 N6 E14 S34 W34 S5 W20$ S20$ PTR= E15 FCB=[YR=2004] E14 S11W14 N11 $ W15 $.

EXTRA FEATURES

LN	OB/XF CODE	DESCRIPTION	BLD	CAP	L	W	UNITS	UT	Adj R	ADJ UNIT PRICE	ORIG COND	YEAR ON	YEAR ACTUAL	Q	% COND	OB/XF MKT VALUE	NOTES
1	0300	BOAT DCK W	0	100	0	0	225.00	SF	40.00	40.00	100	2015	2015	3	75	6,750	
2	0310	AL GANG WY	0	100	0	0	18.00	LF	115.00	115.00	100	2015	2015	3	65	1,346	
3	0303	FLT DOCK W	0	100	8	16	128.00	SF	26.00	26.00	100	2015	2015	3	75	2,496	
4	0855	CONC PAVER	0	100	0	0	5,440.00	SF	10.00	10.00	100	2004	2004	3	83	45,152	
5	0861	POOL GUNIT	0	100	33	15	495.00	SF	85.00	85.00	100	2004	2004	3	32	13,464	
6	0857	SANDSTONE/	0	100	0	0	1,953.00	SF	16.00	16.00	100	2004	2004	3	95	29,686	
7	0504	FP-ELECTRI	0	100	0	0	1.00	UT	2,000.00	2,000.00	100	2004	2004	3	87	1,740	
8	1126	CB/STC 8"	0	100	0	0	306.00	SF	8.00	8.00	100	2004	2004	3	83	2,032	
9	0462	ST/AL FNC	0	100	0	0	7,068.00	SF	12.00	12.00	100	2004	2004	3	32	27,141	
10	0920	CWALL-WD/M	0	100	0	0	65.00	LF	390.00	390.00	100	2004	2004	3	21	5,324	

TOTAL OB/XF 135,131

LAND DESCRIPTION

LN	USE CODE	CLS	LAND USE DESCRIPTION	CAP	RD	LOC ZONE	FRONT	DEPTH	TOT LND UTS	UNIT TYPE	DT	DPTH FACT	% COND	TOT ADJ	UNIT PRICE	ADJ UNIT PRICE	LAND VALUE	OTHER ADJUSTMENTS AND NOTES	YEAR	DENSITY	DECL	FRZ	YR	CONSRV
1	000132	C	RES RIVER	100		RSF-	1100.00	350.00	100.00	FF		1.00	1.00	1.00	8,000.00	8,000.00	800,000							

REVIEW DATE 01/31/2025 BY NWX Total Acres: 0.00 Total Land Value: 800,000 Market: 0 Agricultural: 0 Common: 800,000 PRINTED 07/30/2025 BY SYS

BLK B (K/A PARCEL B} LOT 4
WILDERS SUB OF NASSAU RIVER
FRONTAGE PBK 2/67

KUTZLEB MICHAEL KEITH & CLAUDIA DEBORAH
95714 WILDER BLVD
FERNANDINA BEACH, FL 32034

2025

44-2N-28-5200-0004-0000

NASSAU COUNTY PROPERTY

BUILDING CHARACTERISTICS

ELEMENT	CD	CONSTRUCTION

DOR CODE	0100	SINGLE FAMILY	
MAP NUM		MKT AREA	04
NEIGHBORHOOD/LOC	4009.00		

AREA TYPE	TOTAL GROSS AREA	PCT OF BASE	YEAR	TOT ADJ AREA	SUBAREA MARKET VALUE
TOTALS					

MARKET ADJUSTMENTS

TYPE	MDL	EFF. AREA	TOT ADJ PTS	EFF. BASE RATE	REPL. COST NEW	AYB	EYB	ECON	FNCT		NORM	% COND

VALUATION SUMMARY

VALUATION BY		STANDARD
Tax Group: 4	Tax Dist:	
BUILDING MARKET VALUE		827,770
TOTAL MARKET OB/XF VALUE		156,253
TOTAL LAND VALUE - MARKET		800,000
TOTAL MARKET VALUE		1,784,023
SOH/AGL Deduction		731,242
ASSESSED VALUE		1,052,781
TOTAL EXEMPTION VALUE	HX HB	50,722
BASE TAXABLE VALUE		1,002,059
TOTAL JUST VALUE		1,784,023
NCON VALUE		0
INCOME VALUE		
PREVIOUS YEAR MKT VALUE		1,703,919

PERMIT NUM	DESCRIPTION	AMT	ISSUED

BLD DATE		LGL DATE	
XF DATE		LAND DATE	05/09/2025 MLU
INC DATE		AG DATE	

SALES DATA

OFF RECORD Number	DATE	TYPE INST	Q / U	V / I	RSN CD	SALE PRICE
2285/0600	6/26/2019	WD	U	I	37	1,600,000
GRANTOR: VOSS CINDY L & FREDER						
GRANTEE: KUTZLEB MICHAEL KEI						
0962/0659	12/15/2000	WD	U	I		215,000
GRANTOR: WALDING JOE						
GRANTEE: VOSS CINDY L & FRED						

EXTRA FEATURES

LN	OB/XF CODE	DESCRIPTION	BLD	CAP	L	W	UNITS	UT	Adj R	ADJ UNIT PRICE	ORIG COND	YEAR ON	YEAR ACTUAL	Q	% COND	OB/XF MKT VALUE	NOTES
11	0855	CONC PAVER	0	100	0	0	1,020.00	SF	10.00	10.00	100	2006	2006	3	86	8,772	
12	0317	DCK PLNG W	0	100	0	0	4.00	UT	1,000.00	1,000.00	100	2015	2015	3	65	2,600	
13	0322	BOAT LFT L	0	100	0	0	1.00	UT	1,500.00	1,500.00	100	2015	2015	3	65	975	
14	0600	SUMMER KIT	0	100	0	0	1.00	UT	15,000.00	15,000.00	100	2004	2004	3	21	3,150	
15	0525	GAZEBO	0	100	0	0	1.00	UT	7,500.00	7,500.00	100	2015	2015	3	75	5,625	

BUILDING NOTES

BUILDING DIMENSIONS

LAND DESCRIPTION

TOTAL OB/XF 21,122

LN	USE CODE	CLS	LAND USE DESCRIPTION	CAP	RD	LOC ZONE	FRONT	DEPTH	TOT LND UTS	UNIT TYPE	DT	DPTH FACT	% COND	TOT ADJ	UNIT PRICE	ADJ UNIT PRICE	LAND VALUE	OTHER ADJUSTMENTS AND NOTES	YEAR	DENSITY	DECL	FRZ	YR	CONSRV

REVIEW DATE 01/31/2025 BY NWX Total Acres: 0.00 Total Land Value: 800,000 Market: 0 Agricultural: 0 Common: 800,000 PRINTED 07/30/2025 BY SYS