LOT 15
IN OR 1903/473
MURRAY'S TRIANGLE PB 6/31

HICE HOWARD R JR & LUCINDA H
95164 NASSAU RIVER RD
FERNANDINA BEACH, FL 32034

2025

44-2N-28-514M-0015-0000

BUILDING CHARACTERISTICS

ELEMENT	CD	CONSTRUCTION
Exterior Wall	31	HARDIE BRD 100
Roof Structur	03	GABLE/HIP 100
Roof Cover	03	COMP SHNGL 90
Roof Cover	11	SLATE 10
Interior Wall	05	DRYWALL 100
Interior Floo	13	LVT/LAMNT 80
Interior Floo	14	CARPET 20
Air Condition	03	CENTRAL 100
Heating Type	04	AIR DUCTED 100
Bedrooms		3 100
Bathrooms		2.5 100
Frame	02	WOOD FRAME 100
Stories	1.	1. 100
Units		0 100
Occupancy	00	NONE 100
Quality	06	Quality Level 06
DOR CODE	0100	SINGLE FAMILY
MAP NUM		MKT AREA 04
NEIGHBORHOOD/LOC	4064.00	

AREA TYPE	TOTAL GROSS AREA	PCT OF BASE	YEAR	TOT ADJ AREA	SUBAREA MARKET VALUE
BAS	2,461	100	2018	2,461	378,325
FCP	299	25	2018	75	11,529
FGR	483	55	2018	266	40,892
FOP	238	30	2018	71	10,915
FOP	325	30	2018	98	15,066
TOTALS	3,806			2,971	456,727

MARKET ADJUSTMENTS

TYPE	MDL	EFF. AREA	TOT ADJ PTS	EFF. BASE RATE	REPL. COST NEW	AYB	EYB	ECON	FNCT		NORM	% COND
0900	01	2,971	119.4505	157.67	468,438	2018	2018	0	0	0	2.50	97.50

1 SNGL FAM – 100% - 2020 Heated Area: 2461 HX Base Yr

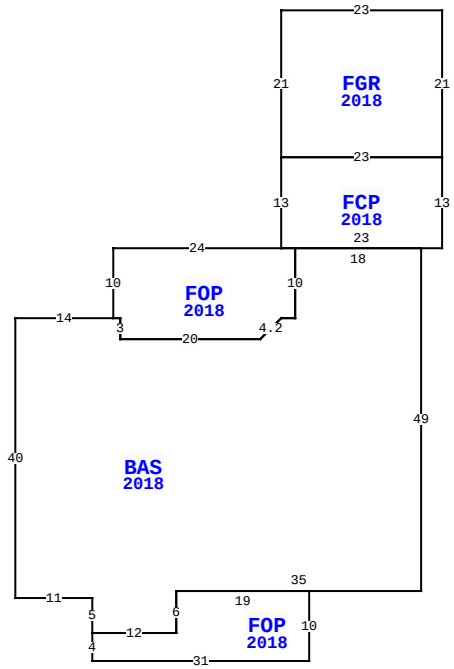

95164 NASSAU RIVER RD, FERNANDINA BEACH

BLD DATE		LGL DATE	
XF DATE		LAND DATE	05/09/2025 MLU
INC DATE		AG DATE	

NASSAU COUNTY PROPERTY

PAGE 1 of 2 4

VALUATION SUMMARY

VALUATION BY		STANDARD
Tax Group: 4	Tax Dist:	
BUILDING MARKET VALUE		470,481
TOTAL MARKET OB/XF VALUE		58,003
TOTAL LAND VALUE - MARKET		100,000
TOTAL MARKET VALUE		628,484
SOH/AGL Deduction		57,152
ASSESSED VALUE		571,332
TOTAL EXEMPTION VALUE	13	571,332
BASE TAXABLE VALUE		0
TOTAL JUST VALUE		628,484
NCON VALUE		0
INCOME VALUE		
PREVIOUS YEAR MKT VALUE		577,345

PERMIT NUM	DESCRIPTION	AMT	ISSUED
B00150	CO ISSUED	0	10/24/2018
B1807555	SCRN ENCLSRE	19,000	07/25/2018
B1803784	GARAGE	28,660	06/01/2018
B1803612	SWIM POOL	41,943	06/01/2018
B1800150	NEW CONSTR	329,632	01/05/2018

SALES DATA

OFF RECORD Number	DATE	TYPE INST	Q / U	V / I	RSN CD	SALE PRICE
1903/0473	2/18/2014	WD	Q	V	01	36,000
GRANTOR: MURRAY'S TRIANGLE LLC						
GRANTEE: HICE HOWARD R JR &						
1729/0482	3/14/2011	WD	U	V	12	172,500
GRANTOR: HERITAGE BANK OF THE						
GRANTEE: MURRAY'S TRIANGLE L						

BUILDING NOTES

BUILDING DIMENSIONS

FGR=[YR=2018] W23 S21 FCP=[YR=2018] S13 FOP=[YR=2018] W24 S10 BAS=[YR=2018] W14 S40 E11 S5 FOP=[YR=2018] S4 E31 N10 W19 S6 W12$ E12 N6 E35 N49 W18 S10 W2 D3 L3 W20 N3 W1$ E1 S3 E20 U3 R3 E2 N10 W2$ E23 N13 W23$ E23 N21$.

EXTRA FEATURES

LN	OB/XF CODE	DESCRIPTION	BLD	CAP	L	W	UNITS	UT	Adj R	ADJ UNIT PRICE	ORIG COND	YEAR ON	YEAR ACTUAL	Q	% COND	OB/XF MKT VALUE	NOTES
1	0500	FP-PRE FAB	0	100	0	0	1.00	UT	3,500.00	3,500.00	100	2018	2018	3	98	3,430	
2	0810	CONCRETE A	0	100	50	4	200.00	SF	6.50	6.50	100	2018	2018	3	97	1,261	
3	0812	CONCRETE C	0	100	0	0	3,264.00	SF	4.00	4.00	100	2018	2018	3	97	12,664	
4	0861	POOL GUNIT	0	100	25	14	350.00	SF	85.00	85.00	100	2018	2018	3	84	24,990	
5	0855	CONC PAVER	0	100	0	0	466.00	SF	10.00	10.00	100	2018	2018	3	97	4,520	
6	0911	SCRN RM A	0	100	34	24	816.00	SF	17.50	17.50	100	2018	2018	3	78	11,138	

LAND DESCRIPTION

TOTAL OB/XF 58,003

LN	USE CODE	CLS	LAND USE DESCRIPTION	CAP	RD	LOC ZONE	FRONT	DEPTH	TOT LND UTS	UNIT TYPE	DT	DPTH FACT	% COND	TOT ADJ	UNIT PRICE	ADJ UNIT PRICE	LAND VALUE	OTHER ADJUSTMENTS AND NOTES	YEAR	DENSITY	DECL	FRZ	YR	CONSRV
1	000100	C	RES	100		RSF-1	0.00	0.00	1.00	LT		1.00	1.00	1.00	100,000.00	100,000.00	100,000							

REVIEW DATE 01/22/2019 BY KW Total Acres: 0.00 Total Land Value: 100,000 Market: 0 Agricultural: 0 Common: 100,000 PRINTED 07/30/2025 BY SYS

LOT 15
IN OR 1903/473
MURRAY'S TRIANGLE PB 6/31

HICE HOWARD R JR & LUCINDA H
95164 NASSAU RIVER RD
FERNANDINA BEACH, FL 32034

2025

44-2N-28-514M-0015-0000

NASSAU COUNTY PROPERTY

BUILDING CHARACTERISTICS

ELEMENT	CD	CONSTRUCTION
Exterior Wall	25	MOD METAL 100
Roof Structur	10	STEEL FRME 100
Roof Cover	12	MODULAR MT 100
Interior Wall	07	NONE 100
Interior Floo	03	CONC FINSH 100
Air Condition	01	NONE 100
Heating Type	01	NONE 100
Bedrooms		0 100
Bathrooms		0 100
Frame	05	STEEL 100
Stories	1.	1. 100
Units		0 100
Quality	06	Quality Level 06

DOR CODE	0100	SINGLE FAMILY	
MAP NUM		MKT AREA	04
NEIGHBORHOOD/LOC	4064.00		

AREA TYPE	TOTAL GROSS AREA	PCT OF BASE	YEAR	TOT ADJ AREA	SUBAREA MARKET VALUE
BAS	420	100	2018	420	11,327
FCP	360	25	2018	90	2,427
TOTALS	780			510	13,754

MARKET ADJUSTMENTS

TYPE	MDL	EFF. AREA	TOT ADJ PTS	EFF. BASE RATE	REPL. COST NEW	AYB	EYB	ECON	FNCT		NORM	% COND
6500	11	510	77.5500	28.69	14,632	2018	2018	0	0	0	6.00	94.00

2 GARAGE RES – 100% - 2020 Heated Area: 420 HX Base Yr

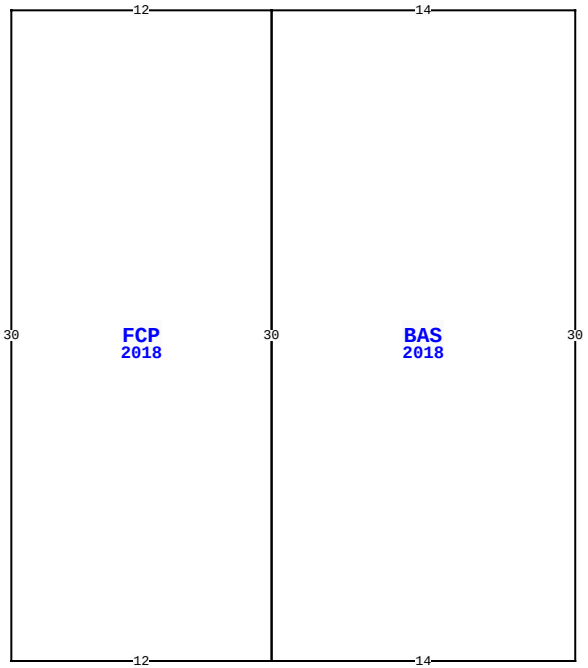

BLD DATE		LGL DATE	
XF DATE		LAND DATE	05/09/2025 MLU
INC DATE		AG DATE	

95164 NASSAU RIVER RD, FERNANDINA BEACH

VALUATION SUMMARY

VALUATION BY		STANDARD
Tax Group: 4	Tax Dist:	
BUILDING MARKET VALUE		470,481
TOTAL MARKET OB/XF VALUE		58,003
TOTAL LAND VALUE - MARKET		100,000
TOTAL MARKET VALUE		628,484
SOH/AGL Deduction		57,152
ASSESSED VALUE		571,332
TOTAL EXEMPTION VALUE	13	571,332
BASE TAXABLE VALUE		0
TOTAL JUST VALUE		628,484
NCON VALUE		0
INCOME VALUE		
PREVIOUS YEAR MKT VALUE		577,345

PERMIT NUM	DESCRIPTION	AMT	ISSUED

SALES DATA

OFF RECORD Number	DATE	TYPE INST	Q / U	V / I	RSN CD	SALE PRICE
1903/0473	2/18/2014	WD	Q	V	01	36,000
GRANTOR: MURRAY'S TRIANGLE LLC						
GRANTEE: HICE HOWARD R JR &						
1729/0482	3/14/2011	WD	U	V	12	172,500
GRANTOR: HERITAGE BANK OF THE						
GRANTEE: MURRAY'S TRIANGLE L						

BUILDING NOTES

BUILDING DIMENSIONS

BAS=[YR=2018] W14 FCP=[YR=2018] W12 S30 E12 N30$ S30 E14 N30$.

EXTRA FEATURES

L N	OB/XF CODE	DESCRIPTION	BLD	CAP	L	W	UNITS	UT	Adj R	ADJ UNIT PRICE	ORIG COND	YEAR ON	YEAR ACTUAL	Q	% COND	OB/XF MKT VALUE	NOTES

LAND DESCRIPTION

TOTAL OB/XF 0

L N	USE CODE	CLS	LAND USE DESCRIPTION	CAP	R D	LOC ZONE	FRONT	DEPTH	TOT LND UTS	UNIT TYPE	D T	DPTH FACT	% COND	TOT ADJ	UNIT PRICE	ADJ UNIT PRICE	LAND VALUE	OTHER ADJUSTMENTS AND NOTES	YEAR	DENSITY	DECL	FRZ	YR	CONSRV

REVIEW DATE 01/22/2019 BY KW Total Acres: 0.00 Total Land Value: 100,000 Market: 0 Agricultural: 0 Common: 100,000 PRINTED 07/30/2025 BY SYS