IN OR 2373/1223
PARCEL 28-2 & BLOCK 1 S-1 OF
LOT 5 REPLAT SEYMOUR POINT &

MCGRATH E WILLIAM JR TRUST/MCGRATH E WILLIAM JR TR
95181 POINT SEYMORE TRAIL
FERNANDINA BEACH, FL 32034

2025

44-2N-28-0000-0028-0020

NASSAU COUNTY PROPERTY

BUILDING CHARACTERISTICS

ELEMENT	CD	CONSTRUCTION
Exterior Wall	10	ABOVE AVG 100
Roof Structur	08	IRREGULAR 100
Roof Cover	12	MODULAR MT 100
Interior Wall	05	DRYWALL 100
Interior Floo	11	CLAY TILE 100
Air Condition	03	CENTRAL 100
Heating Type	04	AIR DUCTED 100
Bedrooms		4 100
Bathrooms		3 100
Frame	02	WOOD FRAME 100
Stories	2.	2. 100
Units		0 100
Occupancy	00	NONE 100
Quality	01	Quality Level 01
DOR CODE	0100	SINGLE FAMILY
MAP NUM		MKT AREA 04
NEIGHBORHOOD/LOC	4009.00	

AREA TYPE	TOTAL GROSS AREA	PCT OF BASE	YEAR	TOT ADJ AREA	SUBAREA MARKET VALUE
BAS	1,353	100	2006	1,353	184,709
FGR	508	55	2006	279	38,089
FOP	201	30	2006	60	8,191
FOP	904	30	2006	271	36,996
FSP	391	40	2006	156	21,297
FST	20	55	2006	11	1,502
FST	20	55	2006	11	1,502
FST	70	55	2006	38	5,188
FUS	2,426	100	2006	2,426	331,192
STR	73	10	2017	7	955
TOTALS	6,093			4,625	631,396

MARKET ADJUSTMENTS

TYPE	MDL	EFF. AREA	TOT ADJ PTS	EFF. BASE RATE	REPL. COST NEW	AYB	EYB	ECON	FNCT		NORM	% COND
0500	01	4,625	94.4280	149.20	690,050	2006	2006	0	0	0	8.50	91.50

1 SFR CUST – 100% - 2007 Heated Area: 3779 HX Base Yr 2007

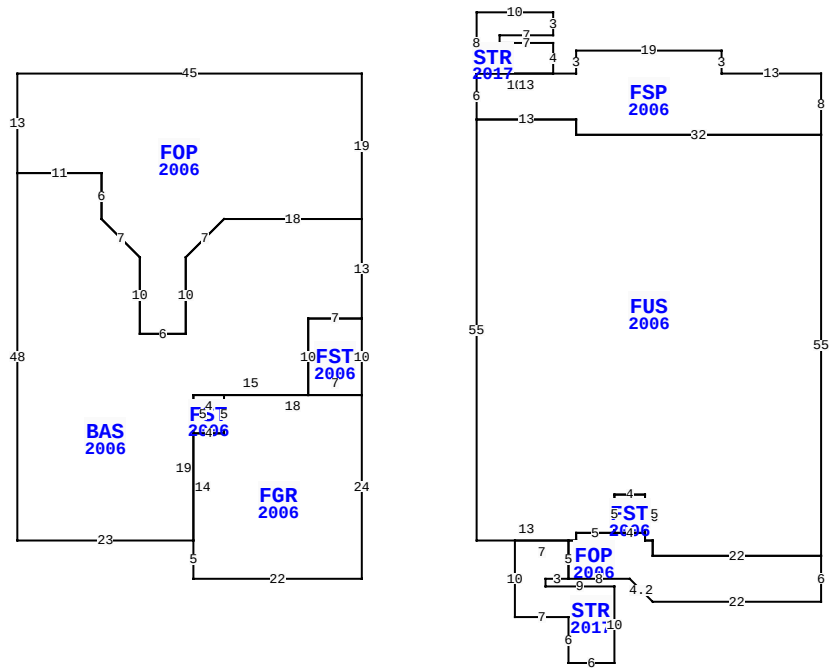

** This building has 11 Sub-Areas

95181 POINT SEYMORE TRL, FERNANDINA BEACH

BLD DATE		LGL DATE	
XF DATE		LAND DATE	05/09/2025 MLU
INC DATE		AG DATE	

NASSAU COUNTY PROPERTY — VALUATION SUMMARY

VALUATION BY		STANDARD
Tax Group: 4	Tax Dist:	
BUILDING MARKET VALUE		631,396
TOTAL MARKET OB/XF VALUE		24,898
TOTAL LAND VALUE - MARKET		1,080,000
TOTAL MARKET VALUE		1,736,294
SOH/AGL Deduction		1,097,416
ASSESSED VALUE		638,878
TOTAL EXEMPTION VALUE	HX HB	50,722
BASE TAXABLE VALUE		588,156
TOTAL JUST VALUE		1,736,294
NCON VALUE		0
INCOME VALUE		
PREVIOUS YEAR MKT VALUE		1,640,925

PERMIT NUM	DESCRIPTION	AMT	ISSUED
M1703472	H/AC	0	06/01/2017
M10377	MECH OTHER	0	09/01/2005
E15454	ELEC OTHER	4,500	08/01/2005
C15549	CO ISSUED	430,580	07/01/2005
R07864	REPAIR/RRF	19,250	07/01/2005
P09748	OTHER	0	07/01/2005

SALES DATA

OFF RECORD Number	DATE	TYPE INST	Q U	V I	RSN CD	SALE PRICE
2373/1223	6/24/2020	WD	U	I	11	100
GRANTOR: MCGRATH E WILLIAM JR						
GRANTEE: MCGRATH E WILLIAM J						
1313/1509	5/02/2005	QC	Q	V	01	100
GRANTOR: MCGRATH RESIDENTIAL P						
GRANTEE: MCGRATH E WILLIAM J						

BUILDING NOTES

BUILDING DIMENSIONS

FOP=[YR=2006] W45 S13 BAS=[YR=2006] S48 E23 FGR=[YR=2006] S5 E22 N24 FST=[YR=2006] N10 W7 S10 E7$ W18 FST=[YR=2006] W4 S5 E4 N5$ S5 W4 S14$ N19 E15 N10 E7 N13 W18 D5 L5 S10 W6 N10 U5 L5 N6 W11 $ E11 S6 D5 R5 S10 E6 N10 U5 R5 E18 N19$ PTR=E15 STR=[YR=2017] N8 E10 S3 W7 S1 E7 S4 W10$ FSP=[YR=2006] E13 N3 E19 S3 E13 S8 FUS=[YR=2006] S55 FOP=[YR=2006] S6 W22 U3 L3 W8 STR=[YR=2017] W3 S1 E9 S10 W6 N6 W7 N10 E7 S5$ N5 E1 N1 E5 FST=[YR=2006] N5 E4 S5 W4 $ E4 S1 E1 S2 E22$W22 N2 W1 N6 W4 S5 W5 S1 W13 N55 E13 S2 E32$ W32 N2 W13 N6$W15$.

EXTRA FEATURES

LN	OB/XF CODE	DESCRIPTION	BLD	CAP	L	W	UNITS	UT	Adj R	ADJ UNIT PRICE	ORIG COND	YEAR ON	YEAR ACTUAL	Q	% COND	OB/XF MKT VALUE	NOTES
1	0812	CONCRETE C	0	100	0	0	1,078.00	SF	4.00	4.00	100	2006	2006	3	86	3,708	
2	0500	FP-PRE FAB	0	100	0	0	1.00	UT	3,500.00	3,500.00	100	2006	2006	3	89	3,115	
3	0300	BOAT DCK W	0	100	0	0	283.00	SF	40.00	40.00	100	2006	2006	3	40	4,528	
4	0475	VF 4 SBPL	0	100	0	0	50.00	LF	14.00	14.00	100	2006	2006	3	66	462	
5	0469	VF LATTIC	0	100	0	0	50.00	SF	5.50	5.50	100	2006	2006	3	66	182	
6	0470	VNYL GATE	0	100	0	0	2.00	UT	300.00	300.00	100	2006	2006	3	66	396	
7	0303	FLT DOCK W	0	100	0	0	70.00	SF	26.00	26.00	100	2006	2006	3	40	728	
8	0322	BOAT LFT L	0	100	0	0	3.00	UT	1,500.00	1,500.00	100	2006	2006	3	24	1,080	
9	0409	ELEVATOR R	0	100	0	0	1.00	UT	10,200.00	10,200.00	100	2006	2006	3	100	10,200	
10	0350	CARPORT WD	0	100	16	10	160.00	SF	13.00	13.00	100	2006	2006	3	24	499	

LAND DESCRIPTION

TOTAL OB/XF 24,898

LN	USE CODE	CLS	LAND USE DESCRIPTION	CAP	RD	LOC ZONE	FRONT	DEPTH	TOT LND UTS	UNIT TYPE	DT	DPTH FACT	% COND	TOT ADJ	UNIT PRICE	ADJ UNIT PRICE	LAND VALUE	OTHER ADJUSTMENTS AND NOTES	YEAR	DENSITY	DECL	FRZ	YR	CONSRV
1	000131	C	RES CREEK	100		RSF-1	135.00	296.00	135.00	FF		1.00	1.00	1.00	8,000.00	8,000.00	1,080,000							

REVIEW DATE 05/12/2019 BY KBA Total Acres: 0.00 Total Land Value: 1,080,000 Market: 0 Agricultural: 0 Common: 1,080,000 PRINTED 07/30/2025 BY SYS