PT SAMUEL HARRISON GRANT
SEC 44-2N-28E IN OR 2688/1770

MAYES CATHERINE M & MICHAEL R
2015 LAKESIDE DRIVE
JACKSONVILLE BEACH, FL 32250

2025

44-2N-28-0000-0023-0030

NASSAU COUNTY PROPERTY

BUILDING CHARACTERISTICS

ELEMENT	CD	CONSTRUCTION
Exterior Wall	31	HARDIE BRD 100
Roof Structur	08	IRREGULAR 100
Roof Cover	03	COMP SHNGL 100
Interior Wall	05	DRYWALL 100
Interior Floo	13	LVT/LAMNT 100
Air Condition	03	CENTRAL 100
Heating Type	04	AIR DUCTED 100
Bedrooms		4 100
Bathrooms		3 100
Frame	02	WOOD FRAME 100
Stories	1.	1. 100
Quality	03	Quality Level 03

DOR CODE 0100 SINGLE FAMILY
MAP NUM | MKT AREA 04
NEIGHBORHOOD/LOC 4006.00

AREA TYPE	TOTAL GROSS AREA	PCT OF BASE	YEAR	TOT ADJ AREA	SUBAREA MARKET VALUE
BAS	2,313	100	2023	2,313	391,614
FGR	450	55	2023	248	41,989
FOP	160	30	2023	48	8,127
FOP	488	30	2023	146	24,719
FOP	608	30	2023	182	30,814
TOTALS	4,019			2,937	497,263

MARKET ADJUSTMENTS

TYPE	MDL	EFF. AREA	TOT ADJ PTS	EFF. BASE RATE	REPL. COST NEW	AYB	EYB	ECON	FNCT		NORM	% COND
0500	01	2,937	107.1600	169.31	497,263	2023	2023	0	0	0	0.00	100.00

2 SFR CUST – 0% - 2025 Heated Area: 2313 HX Base Yr

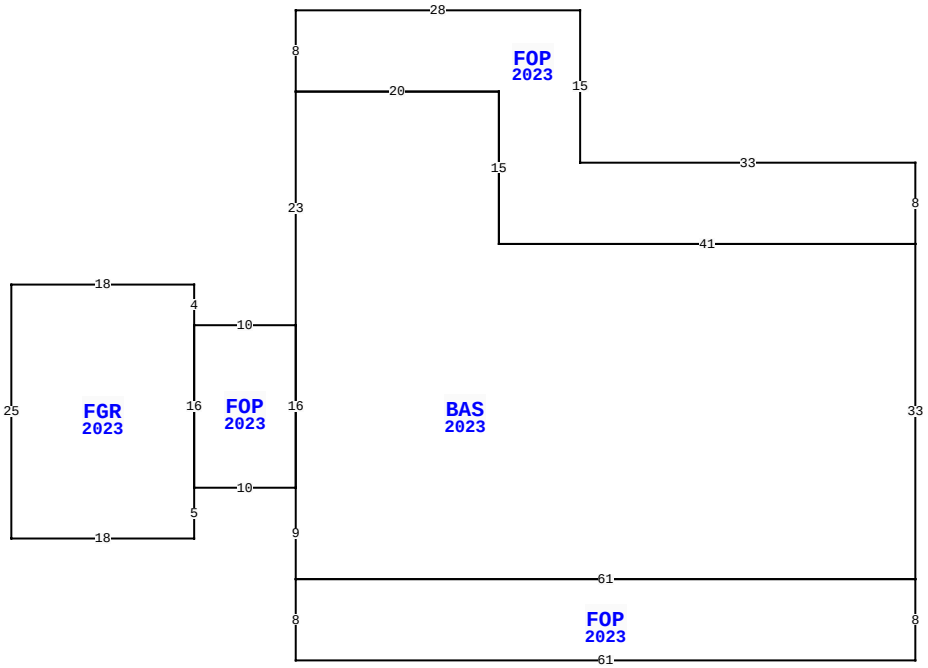

95067 RAINBOW ACRES RD, FERNANDINA BEACH

BLD DATE		LGL DATE	
XF DATE		LAND DATE	05/09/2025 MLU
INC DATE		AG DATE	

VALUATION SUMMARY

VALUATION BY	STANDARD
Tax Group: 4	Tax Dist:
BUILDING MARKET VALUE	497,263
TOTAL MARKET OB/XF VALUE	3,500
TOTAL LAND VALUE - MARKET	200,000
TOTAL MARKET VALUE	700,763
SOH/AGL Deduction	0
ASSESSED VALUE	700,763
TOTAL EXEMPTION VALUE	0
BASE TAXABLE VALUE	700,763
TOTAL JUST VALUE	700,763
NCON VALUE	0
INCOME VALUE	
PREVIOUS YEAR MKT VALUE	625,593

PERMIT NUM	DESCRIPTION	AMT	ISSUED
2207844	CO		04/14/2023
B2207844	NEW CONSTR	402,602	05/19/2022

SALES DATA

OFF RECORD Number	DATE	TYPE INST	Q U	V I	RSN CD	SALE PRICE
2688/1770	1/10/2024	SW	Q	I	01	714,000
GRANTOR: MSB JAX LLC						
GRANTEE: MAYES CATHERINE M &						
2543/1895	2/22/2022	WD	Q	V	01	164,900
GRANTOR: MADAFFERI MONA MARGAR						
GRANTEE: MSB JAX LLC						

BUILDING NOTES

BUILDING DIMENSIONS

BAS=[YR=2023;ORIG=100,10] W41 N15 W20 S23 S16 S9 E61 N33 $
FOP=[YR=2023;ORIG=100,2] W33 N15 W28 S8 E20 S15 E41 N8 $
FOP=[YR=2023;ORIG=39,43] E61 S8 W61 N8 $
FOP=[YR=2023;ORIG=29,18] E10 S16 W10 N16 $
FGR=[YR=2023;ORIG=11,14] E18 S4 S16 S5 W18 N25 $
.

EXTRA FEATURES

LN	OB/XF CODE	DESCRIPTION	BLD	CAP	L	W	UNITS	UT	Adj R	ADJ UNIT PRICE	ORIG COND	YEAR ON	YEAR ACTUAL	Q	% COND	OB/XF MKT VALUE	NOTES
1	0500	FP-PRE FAB	0	0	0	0	1.00	UT	3,500.00	3,500.00	100	2023	2023		100	3,500	

LAND DESCRIPTION

TOTAL OB/XF 3,500

LN	USE CODE	CLS	LAND USE DESCRIPTION	CAP	RD	LOC ZONE	FRONT	DEPTH	TOT LND UTS	UNIT TYPE	DT	DPTH FACT	% COND	TOT ADJ	UNIT PRICE	ADJ UNIT PRICE	LAND VALUE	OTHER ADJUSTMENTS AND NOTES	YEAR	DENSITY	DECL	FRZ	YR	CONSRV
1	000100	C	RES	0	0006	OR	0.00	0.00	2.00	AC		1.00	1.00	1.00	100,000.00	100,000.00	200,000							

REVIEW DATE 07/25/2022 BY KW Total Acres: 2.00 Total Land Value: 200,000 Market: 0 Agricultural: 0 Common: 200,000 PRINTED 07/30/2025 BY SYS