LOT 1
IN OR 2163/1960
MARKET STREET OFFICE SITE

RAYONIER OPERATING COMPANY LLC
C/O PROPERTY TAX COORDINATOR, 1 RAYONIER WAY
YULEE, FL 32097

2025

44-2N-27-1960-0001-0000

NASSAU COUNTY PROPERTY

BUILDING CHARACTERISTICS

ELEMENT	CD	CONSTRUCTION
Exterior Wall	22	PRECAST PN 50
Exterior Wall	28	GLASS THRM 50
Roof Structur	09	RIDGE FRME 100
Roof Cover	13	STAND SEAM 60
Roof Cover	04	BUILT-UP 40
Interior Wall	05	DRYWALL 100
Interior Floo	14	CARPET 90
Interior Floo	11	CLAY TILE 10
Ceiling	01	FIN.SUSPD 100
Air Condition	03	CENTRAL 100
Heating Type	04	AIR DUCTED 100
Fixtures		56 100
Frame	05	STEEL 100
Story Height		16 100
RMS		112 100
Stories	3.	3. 100
Units		0 100
Occupancy	00	NONE 100
Quality	03	Quality Level 03
DOR CODE	1800	MULTI STORY OFFICE
MAP NUM		MKT AREA 04
NEIGHBORHOOD/LOC	4084.00	

AREA TYPE	TOTAL GROSS AREA	PCT OF BASE	YEAR	TOT ADJ AREA	SUBAREA MARKET VALUE
BAS	15,831	100	2017	15,831	3,568,440
BAS	3,417	100	2019	3,417	770,220
CAN	65	30	2017	20	4,508
CAN	70	30	2017	21	4,733
CAN	70	30	2017	21	4,733
CAN	116	30	2017	35	7,890
CAN	120	30	2017	36	8,115
CAN	125	30	2017	38	8,565
CAN	125	30	2017	38	8,565
CAN	125	30	2017	38	8,565
TOTALS	59,766			57,591	12,981,495

MARKET ADJUSTMENTS

TYPE	MDL	EFF. AREA	TOT ADJ PTS	EFF. BASE RATE	REPL. COST NEW	AYB	EYB	ECON	FNCT		NORM	% COND
1702	04	57,591	117.1150	296.59	17,080,915	2017	2017	20	0	0	4.00	76.00

1 SUP OFFICE – 0% - 0 Heated Area: 56491 HX Base Yr

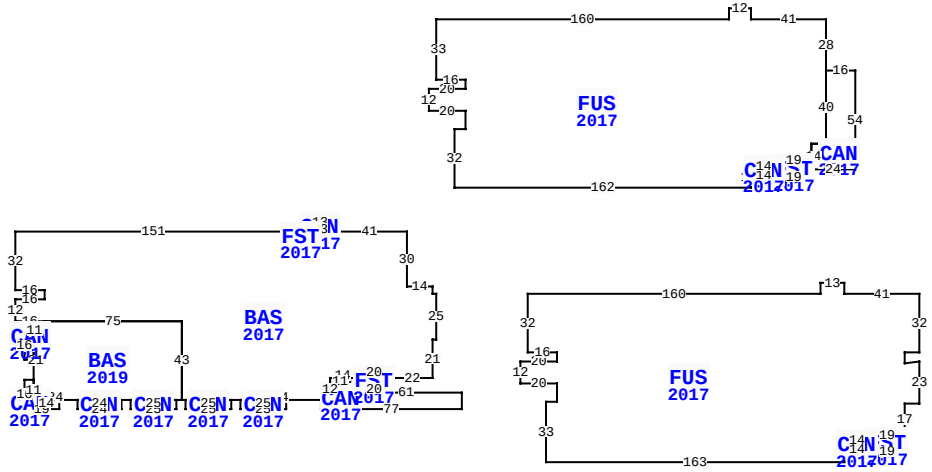

** This building has 19 Sub-Areas

1 RAYONIER WAY, YULEE

BLD DATE	11/14/2019	KK	LGL DATE		
XF DATE	11/14/2019	KK	LAND DATE	10/22/2024	DC
INC DATE	05/20/2023	REA	AG DATE		

VALUATION SUMMARY

VALUATION BY	DIRECT_CAP
Tax Group: 4	Tax Dist:
BUILDING MARKET VALUE	14,157,784
TOTAL MARKET OB/XF VALUE	0
TOTAL LAND VALUE - MARKET	0
TOTAL MARKET VALUE	14,157,784
SOH/AGL Deduction	0
ASSESSED VALUE	14,157,784
TOTAL EXEMPTION VALUE	0
BASE TAXABLE VALUE	14,157,784
TOTAL JUST VALUE	14,157,784
NCON VALUE	0
INCOME VALUE	14,157,784
PREVIOUS YEAR MKT VALUE	14,157,784

RAYONIER OFFICE BLDG

PERMIT NUM	DESCRIPTION	AMT	ISSUED
19004320	BLD OUT-1ST FLOOR	178,187	06/21/2019
B1632571	CO ISSUED	6,776,339	06/01/2016
E1631481	NEW CONSTR	103,164	06/01/2016
B1632176	NEW CONSTR	1,694,085	04/01/2016

SALES DATA

OFF RECORD Number	DATE	TYPE INST	Q / U	V / I	RSN CD	SALE PRICE
2276/0965	5/16/2019	MS	U	I	11	0
GRANTOR: ONE RAYONIER LLC						
GRANTEE: RAYONIER OPERATING						
2203/1180	6/13/2018	QC	U	V	11	100
GRANTOR: RAYDIENT LLC D/B/A RA						
GRANTEE: WILDLIGHT LLC ET AL						

BUILDING NOTES

BUILDING DIMENSIONS

BAS=[YR=2017] W2 N4 W14 N30 W41 CAN=[YR=2017] N5 W13 S5 FST=[YR=2017] W9 S5 E10 N5 W1$ E13$ W12 S5 W10 N5 W151 S32 E16 S5 W16 S12 E16 BAS=[YR=2019] S5 CAN=[YR=2017] W11 S16 E5 N10 E6 N6$ S6 W6 S21 CAN=[YR=2017] W5 S16 E19 N5 W14 N11 $ S11 E24 CAN=[YR=2017] S5 E24 N5 W24$ E29 CAN=[YR=2017] S5 E25 N5 W25$ E28 N43 W75$ E75 S43 E2 CAN=[YR=2017] S5 E25 N5 W25$ E30 CAN=[YR=2017] S5 E25 N5 W25$ E44 CAN=[YR=2017] S5 E77 N9 W61 N8 W11 S12 W5$ E5 N12 E14 FST=[YR=2017] S6 E20 N9 W20 S3$ N3 E20 S3 E22 N21 E2 N25$ PTR= E50 FUS=[YR=2017] E160 N6 E13 S6 E41 S32 W8 S6 U1 R8 S23 W8 S17 FST=[YR=2017] W19 S3 CAN=[YR=2017] W14 S5 E14 N5$ S6 E19 N9$ S9 W19 N1 W14 S7 W163 N33 E6 N10 W20 N12 E20 N5 W16 N32$ W50$ PTR= N150

EXTRA FEATURES

LN	OB/XF CODE	DESCRIPTION	BLD	CAP	L	W	UNITS	UT	Adj R	ADJ UNIT PRICE	ORIG COND	YEAR ON	YEAR ACTUAL	Q	% COND	OB/XF MKT VALUE	NOTES
1	0803	ASPHALT C	0	0	0	0	80,433.00	SF	2.00	2.00	100	2017	2017	3	78	125,475	
2	0400	CONC CURB	0	0	0	0	3,729.00	LF	15.00	15.00	100	2017	2017	3	97	54,257	
3	0812	CONCRETE C	0	0	0	0	1,968.00	SF	4.00	4.00	100	2017	2017	3	96	7,557	
4	0972	ST LGHT UN	0	0	0	0	22.00	UT	2,530.00	2,530.00	100	2017	2017	3	90	50,094	
5	0402	CONC BUMPE	0	0	0	0	35.00	UT	25.00	25.00	100	2017	2017	3	97	849	
6	0812	CONCRETE C	0	0	0	0	1,390.00	SF	4.00	4.00	100	2017	2017	3	96	5,338	
7	1242	WD DECK A	0	0	15	14	210.00	SF	10.00	10.00	100	2017	2017	3	74	1,554	
8	0812	CONCRETE C	0	0	0	0	1,675.00	SF	4.00	4.00	100	2017	2017	3	96	6,432	
9	0855	CONC PAVER	0	0	0	0	1,718.00	SF	10.00	10.00	100	2017	2017	3	96	16,493	
10	0810	CONCRETE A	0	0	0	0	308.00	SF	6.50	6.50	100	2017	2017	3	96	1,922	

TOTAL OB/XF 269,971

LAND DESCRIPTION

LN	USE CODE	CLS	LAND USE DESCRIPTION	CAP	RD	LOC ZONE	FRONT	DEPTH	TOT LND UTS	UNIT TYPE	DT	DPTH FACT	% COND	TOT ADJ	UNIT PRICE	ADJ UNIT PRICE	LAND VALUE	OTHER ADJUSTMENTS AND NOTES	YEAR	DENSITY	DECL	FRZ	YR	CONSRV
1	001800	C	MULTISTORY	0		PD -	E 0.00	0.00	153,294.00	SF		1.00	1.00	1.00	9.00	9.00	1,379,646							

REVIEW DATE 11/14/2019 BY KK Total Acres: 0.00 Total Land Value: 0 Market: 0 Agricultural: 0 Common: 0 PRINTED 07/30/2025 BY SYS

LOT 1
IN OR 2163/1960
MARKET STREET OFFICE SITE

RAYONIER OPERATING COMPANY LLC
C/O PROPERTY TAX COORDINATOR, 1 RAYONIER WAY
YULEE, FL 32097

2025

44-2N-27-1960-0001-0000

BUILDING CHARACTERISTICS

ELEMENT	CD	CONSTRUCTION

DOR CODE	1800	MULTI STORY OFFICE	
MAP NUM		MKT AREA	04
NEIGHBORHOOD/LOC	4084.00		

AREA TYPE	TOTAL GROSS AREA	PCT OF BASE	YEAR	TOT ADJ AREA	SUBAREA MARKET VALUE
TOTALS					

MARKET ADJUSTMENTS

TYPE	MDL	EFF. AREA	TOT ADJ PTS	EFF. BASE RATE	REPL. COST NEW	AYB	EYB	ECON	FNCT		NORM	% COND

BLD DATE	11/14/2019	KK	LGL DATE
XF DATE	11/14/2019	KK	LAND DATE 10/22/2024 DC
INC DATE	05/20/2023	REA	AG DATE

NASSAU COUNTY PROPERTY

PAGE 2 of 2 4

VALUATION SUMMARY

VALUATION BY	DIRECT_CAP
Tax Group: 4	Tax Dist:
BUILDING MARKET VALUE	14,157,784
TOTAL MARKET OB/XF VALUE	0
TOTAL LAND VALUE - MARKET	0
TOTAL MARKET VALUE	14,157,784
SOH/AGL Deduction	0
ASSESSED VALUE	14,157,784
TOTAL EXEMPTION VALUE	0
BASE TAXABLE VALUE	14,157,784
TOTAL JUST VALUE	14,157,784
NCON VALUE	0
INCOME VALUE	14,157,784
PREVIOUS YEAR MKT VALUE	14,157,784

PERMIT NUM	DESCRIPTION	AMT	ISSUED

SALES DATA

OFF RECORD Number	DATE	TYPE INST	Q / U	V / I	RSN CD	SALE PRICE
2276/0965	5/16/2019	MS	U	I	11	0
GRANTOR: ONE RAYONIER LLC						
GRANTEE: RAYONIER OPERATING						
2203/1180	6/13/2018	QC	U	V	11	100
GRANTOR: RAYDIENT LLC D/B/A RA						
GRANTEE: WILDLIGHT LLC ET AL						

BUILDING NOTES

BUILDING DIMENSIONS

EXTRA FEATURES

LN	OB/XF CODE	DESCRIPTION	BLD	CAP	L	W	UNITS	UT	Adj R	ADJ UNIT PRICE	ORIG COND	YEAR ON	YEAR ACTUAL	Q	% COND	OB/XF MKT VALUE	NOTES
11	0811	CONCRETE B	0	0	0	0	616.00	SF	5.20	5.20	100	2017	2017	3	96	3,075	
12	0446	BOX FNC 6'	0	0	0	0	134.00	LF	40.00	40.00	100	2017	2017	3	74	3,966	
13	0463	FENCE GATE	0	0	0	0	2.00	UT	600.00	600.00	100	2017	2017	3	90	1,080	
14	0463	FENCE GATE	0	0	0	0	1.00	UT	600.00	600.00	100	2017	2017	3	90	540	
15	0810	CONCRETE A	0	0	12	8	96.00	SF	6.50	6.50	100	2017	2017	3	96	599	
16	0810	CONCRETE A	0	0	7	7	49.00	SF	6.50	6.50	100	2017	2017	3	96	306	
17	0410	ELEVATOR	0	0	0	0	2.00	UT	100,000.00	100,000.00	100	0	0	3	100	200,000	
18	0966	FIRE SPRNK	0	0	0	0	56,465.00	SF	3.00	3.00	100	2017	2017	3	96	162,619	

LAND DESCRIPTION

TOTAL OB/XF 372,185

LN	USE CODE	CLS	LAND USE DESCRIPTION	CAP	RD	LOC ZONE	FRONT	DEPTH	TOT LND UTS	UNIT TYPE	DT	DPTH FACT	% COND	TOT ADJ	UNIT PRICE	ADJ UNIT PRICE	LAND VALUE	OTHER ADJUSTMENTS AND NOTES	YEAR	DENSITY	DECL	FRZ	YR	CONSRV

REVIEW DATE 11/14/2019 BY KK Total Acres: 0.00 Total Land Value: 0 Market: 0 Agricultural: 0 Common: 0 PRINTED 07/30/2025 BY SYS