LOT 120
EAST NASSAU WILDLIGHT PH 1C-1
OR 2347/1911

SPILSBURY EDGARDO & MEGAN
594 BUTTONWOOD LOOP
YULEE, FL 32097

2025

44-2N-27-1003-0120-0000

NASSAU COUNTY PROPERTY

BUILDING CHARACTERISTICS

ELEMENT	CD	CONSTRUCTION
Exterior Wall	31	HARDIE BRD 100
Roof Structur	03	GABLE/HIP 100
Roof Cover	03	COMP SHNGL 100
Interior Wall	05	DRYWALL 100
Interior Floo	11	CLAY TILE 70
Interior Floo	14	CARPET 30
Air Condition	03	CENTRAL 100
Heating Type	04	AIR DUCTED 100
Bedrooms		4 100
Bathrooms		3 100
Frame	02	WOOD FRAME 100
Stories	1.	1. 100
Units		0 100
Occupancy	00	NONE 100
Quality	02	Quality Level 02
DOR CODE	0100	SINGLE FAMILY
MAP NUM		MKT AREA 04
NEIGHBORHOOD/LOC	4086.0100	

AREA TYPE	TOTAL GROSS AREA	PCT OF BASE	YEAR	TOT ADJ AREA	SUBAREA MARKET VALUE
BAS	2,258	100	2021	2,258	320,514
FGR	520	55	2021	286	40,597
FOP	152	30	2021	46	6,529
FOP	182	30	2021	55	7,807
TOTALS	3,112			2,645	375,448

MARKET ADJUSTMENTS

TYPE	MDL	EFF. AREA	TOT ADJ PTS	EFF. BASE RATE	REPL. COST NEW	AYB	EYB	ECON	FNCT		NORM	% COND
0900	01	2,645	108.6192	143.38	379,240	2021	2021	0	0	0	1.00	99.00

1 SNGL FAM – 100% - 2022 Heated Area: 2258 HX Base Yr 2022

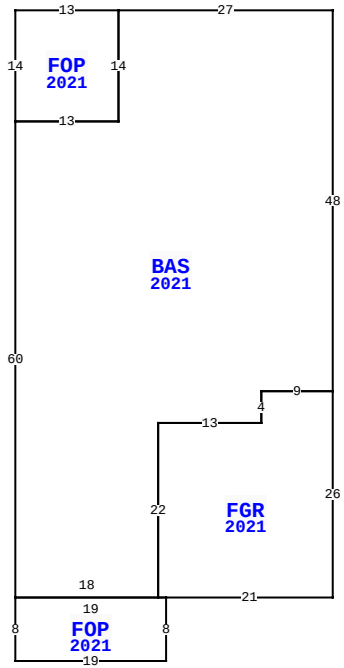

594 BUTTONWOOD LOOP, YULEE

BLD DATE	03/21/2023 NW	LGL DATE	
XF DATE		LAND DATE	05/07/2025 MLU
INC DATE		AG DATE	

VALUATION SUMMARY

VALUATION BY		STANDARD
Tax Group: 4	Tax Dist:	
BUILDING MARKET VALUE		375,448
TOTAL MARKET OB/XF VALUE		3,506
TOTAL LAND VALUE - MARKET		75,000
TOTAL MARKET VALUE		453,954
SOH/AGL Deduction		89,582
ASSESSED VALUE		364,372
TOTAL EXEMPTION VALUE	HX HB	50,722
BASE TAXABLE VALUE		313,650
TOTAL JUST VALUE		453,954
NCON VALUE		0
INCOME VALUE		
PREVIOUS YEAR MKT VALUE		402,031

PERMIT NUM	DESCRIPTION	AMT	ISSUED
21001398	CO ISSUED	0	02/05/2021
20005067	NEW CONSTR	308,394	07/30/2020

SALES DATA

OFF RECORD Number	DATE	TYPE INST	Q U	V I	RSN CD	SALE PRICE
2439/1990	3/01/2021	SW	Q	I	01	342,500
GRANTOR: MATTAMY JACKSONVILLE						
GRANTEE: SPILSBURY EDGARDO &						
2371/0963	6/25/2020	SW	Q	V	05	905,000
GRANTOR: WILDLIGHT LLC						
GRANTEE: MATTAMY JACKSONVILL						

BUILDING NOTES

BUILDING DIMENSIONS

BAS=[YR=2021] W27 FOP=[YR=2021] W13 S14 E13 N14$ S14 W13 S60 FOP=[YR=2021] S8 E19 N8 FGR=[YR=2021] E21 N26 W9 S4 W13 S22 E1$ W19$ E18 N22 E13 N4 E9 N48$.

EXTRA FEATURES

LN	OB/XF CODE	DESCRIPTION	BLD	CAP	L	W	UNITS	UT	Adj R	ADJ UNIT PRICE	ORIG COND	YEAR ON	YEAR ACTUAL	Q	% COND	OB/XF MKT VALUE	NOTES
1	0811	CONCRETE B	0	100	0	0	681.00	SF	5.20	5.20	100	2021	2021	3	99	3,506	

LAND DESCRIPTION

TOTAL OB/XF 3,506

LN	USE CODE	CLS	LAND USE DESCRIPTION	CAP	RD	LOC ZONE	FRONT	DEPTH	TOT LND UTS	UNIT TYPE	DT	DPTH FACT	% COND	TOT ADJ	UNIT PRICE	ADJ UNIT PRICE	LAND VALUE	OTHER ADJUSTMENTS AND NOTES	YEAR	DENSITY	DECL	FRZ	YR	CONSRV
1	000100	C	RES	100		PD -	E 0.00	0.00	1.00	LT		1.00	1.00	1.00	75,000.00	75,000.00	75,000							

REVIEW DATE 02/16/2021 BY NW Total Acres: 0.00 Total Land Value: 75,000 Market: 0 Agricultural: 0 Common: 75,000 PRINTED 07/30/2025 BY SYS