LOT 89
EAST NASSAU WILDLIGHT PH 1C-1
OR 2347/1911

MORRISON MARCELLA THERESA
624 PALMETTO PLACE
YULEE, FL 32097

2025

44-2N-27-1003-0089-0000

NASSAU COUNTY PROPERTY

BUILDING CHARACTERISTICS

ELEMENT	CD	CONSTRUCTION
Exterior Wall	31	HARDIE BRD 100
Roof Structur	03	GABLE/HIP 100
Roof Cover	03	COMP SHNGL 100
Interior Wall	05	DRYWALL 100
Interior Floo	11	CLAY TILE 70
Interior Floo	14	CARPET 30
Air Condition	03	CENTRAL 100
Heating Type	04	AIR DUCTED 100
Bedrooms		3 100
Bathrooms		2 100
Frame	02	WOOD FRAME 100
Stories	1.	1. 100
Units		0 100
Occupancy	00	NONE 100
Quality	02	Quality Level 02

DOR CODE 0100 SINGLE FAMILY
MAP NUM | MKT AREA 04
NEIGHBORHOOD/LOC 4086.0100

AREA TYPE	TOTAL GROSS AREA	PCT OF BASE	YEAR	TOT ADJ AREA	SUBAREA MARKET VALUE
BAS	1,627	100	2022	1,627	234,962
FGR	483	55	2022	266	38,414
FOP	80	30	2022	24	3,466
FOP	120	30	2022	36	5,199
TOTALS	2,310			1,953	282,041

MARKET ADJUSTMENTS

TYPE	MDL	EFF. AREA	TOT ADJ PTS	EFF. BASE RATE	REPL. COST NEW	AYB	EYB	ECON	FNCT		NORM	% COND
0900	01	1,953	109.9511	145.14	283,458	2022	2022	0	0	0	0.50	99.50

1 SNGL FAM – 100% - 2023 Heated Area: 1627 HX Base Yr 2023

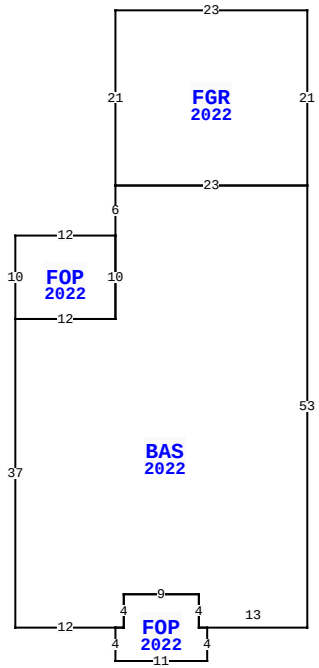

624 PALMETTO PL, YULEE

BLD DATE	03/21/2023 NW	LGL DATE	
XF DATE		LAND DATE	05/07/2025 MLU
INC DATE		AG DATE	

VALUATION SUMMARY

VALUATION BY		STANDARD
Tax Group: 4	Tax Dist:	
BUILDING MARKET VALUE		282,041
TOTAL MARKET OB/XF VALUE		3,403
TOTAL LAND VALUE - MARKET		75,000
TOTAL MARKET VALUE		360,444
SOH/AGL Deduction		63,300
ASSESSED VALUE		297,144
TOTAL EXEMPTION VALUE	HX HB	50,722
BASE TAXABLE VALUE		246,422
TOTAL JUST VALUE		360,444
NCON VALUE		0
INCOME VALUE		
PREVIOUS YEAR MKT VALUE		317,737

PERMIT NUM	DESCRIPTION	AMT	ISSUED
22007172	CO ISSUED	0	05/09/2022
21009250	NEW CONSTR	276,598	09/01/2021

SALES DATA

OFF RECORD Number	DATE	TYPE INST	Q U	V I	RSN CD	SALE PRICE
2566/1495	5/27/2022	SW	Q	I	02	353,900
GRANTOR: MATTAMY JACKSONVILLE						
GRANTEE: MORRISON MRCELLA TH						
2475/1329	6/30/2021	SW	Q	V	05	1,388,000
GRANTOR: WILDLIGHT LLC						
GRANTEE: MATTAMY JACKSONVILL						

BUILDING NOTES

BUILDING DIMENSIONS

FGR=[YR=2022] W23 S21 BAS=[YR=2022] S6 FOP=[YR=2022] W12 S10 E12 N10$ S10 W12 S37 E12 FOP=[YR=2022] S4 E11 N4 W1 N4 W9 S4 W1$ E1 N4 E9 S4 E13 N53 W23$ E23 N21$.

EXTRA FEATURES

LN	OB/XF CODE	DESCRIPTION	BLD	CAP	L	W	UNITS	UT	Adj R	ADJ UNIT PRICE	ORIG COND	YEAR ON	YEAR ACTUAL	Q	% COND	OB/XF MKT VALUE	NOTES
1	0810	CONCRETE A	0	100	0	0	36.00	SF	6.50	6.50	100	2022	2022	3	99	232	
2	0811	CONCRETE B	0	100	0	0	616.00	SF	5.20	5.20	100	2022	2022	3	99	3,171	

LAND DESCRIPTION

TOTAL OB/XF 3,403

LN	USE CODE	CLS	LAND USE DESCRIPTION	CAP	RD	LOC ZONE	FRONT	DEPTH	TOT LND UTS	UNIT TYPE	DT	DPTH FACT	% COND	TOT ADJ	UNIT PRICE	ADJ UNIT PRICE	LAND VALUE	OTHER ADJUSTMENTS AND NOTES	YEAR	DENSITY	DECL	FRZ	YR	CONSRV
1	000100	C	RES	100		PD -	E 0.00	0.00	1.00	LT		1.00	1.00	1.00	75,000.00	75,000.00	75,000							

REVIEW DATE 07/26/2022 BY NW Total Acres: 0.00 Total Land Value: 75,000 Market: 0 Agricultural: 0 Common: 75,000 PRINTED 07/30/2025 BY SYS