LOT 85
EAST NASSAU WILDLIGHT PH 1C-1
OR 2347/1911

FLOYD JAMES N JR &/HARRIS CIEL F
676 PALMETTO PLACE
YULEE, FL 32097

2025

44-2N-27-1003-0085-0000

NASSAU COUNTY PROPERTY

BUILDING CHARACTERISTICS

ELEMENT	CD	CONSTRUCTION
Exterior Wall	31	HARDIE BRD 100
Roof Structur	03	GABLE/HIP 100
Roof Cover	03	COMP SHNGL 100
Interior Wall	05	DRYWALL 100
Interior Floo	13	LVT/LAMNT 60
Interior Floo	14	CARPET 40
Air Condition	03	CENTRAL 100
Heating Type	04	AIR DUCTED 100
Bedrooms		3 100
Bathrooms		2.5 100
Frame	02	WOOD FRAME 100
Stories	2.	2. 100
Units		0 100
Occupancy	00	NONE 100
Quality	02	Quality Level 02
DOR CODE	0100	SINGLE FAMILY
MAP NUM		MKT AREA 04
NEIGHBORHOOD/LOC	4086.0100	

AREA TYPE	TOTAL GROSS AREA	PCT OF BASE	YEAR	TOT ADJ AREA	SUBAREA MARKET VALUE
BAS	755	100	2022	755	102,662
FGR	483	55	2022	266	36,170
FOP	70	30	2022	21	2,856
FOP	144	30	2022	43	5,847
FUS	1,012	100	2022	1,012	137,609
STR	70	10	2022	7	952
TOTALS	2,534			2,104	286,095

MARKET ADJUSTMENTS

TYPE	MDL	EFF. AREA	TOT ADJ PTS	EFF. BASE RATE	REPL. COST NEW	AYB	EYB	ECON	FNCT		NORM	% COND
0900	01	2,104	103.5272	136.66	287,533	2022	2022	0	0	0	0.50	99.50

1 SNGL FAM – 100% - 2023 Heated Area: 1767 HX Base Yr 2023

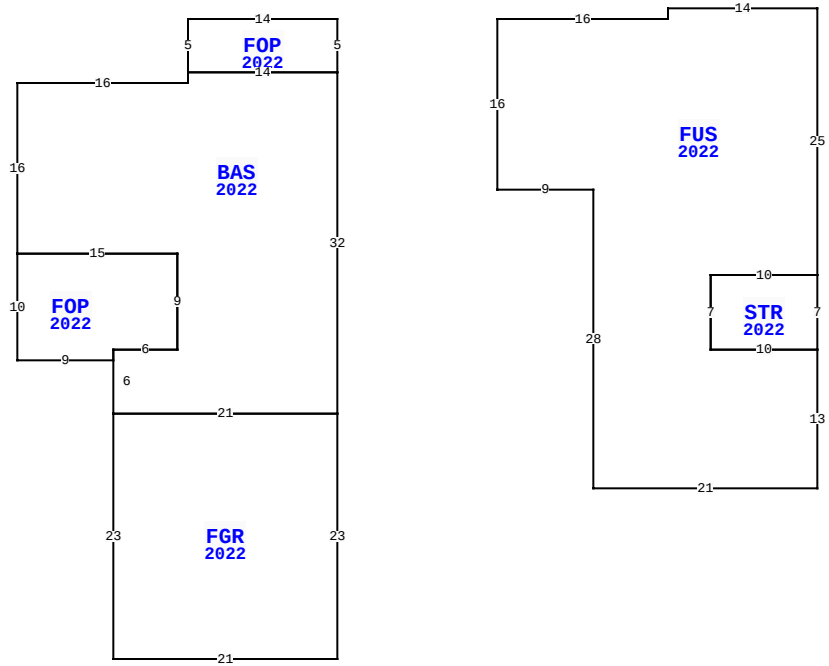

676 PALMETTO PL, YULEE

BLD DATE	03/21/2023 NW	LGL DATE	
XF DATE		LAND DATE	05/07/2025 MLU
INC DATE		AG DATE	

VALUATION SUMMARY

VALUATION BY		STANDARD
Tax Group: 4	Tax Dist:	
BUILDING MARKET VALUE		286,095
TOTAL MARKET OB/XF VALUE		5,097
TOTAL LAND VALUE - MARKET		75,000
TOTAL MARKET VALUE		366,192
SOH/AGL Deduction		37,419
ASSESSED VALUE		328,773
TOTAL EXEMPTION VALUE	HX HB	50,722
BASE TAXABLE VALUE		278,051
TOTAL JUST VALUE		366,192
NCON VALUE		0
INCOME VALUE		
PREVIOUS YEAR MKT VALUE		323,098

PERMIT NUM	DESCRIPTION	AMT	ISSUED
22006834	CO ISSUED	0	05/02/2022
21008780	NEW CONSTR	257,591	09/01/2021

SALES DATA

OFF RECORD Number	DATE	TYPE INST	Q U	V I	RSN CD	SALE PRICE
2562/0946	5/09/2022	SW	Q	I	01	354,200
GRANTOR: MATTAMY JACKSONVILLE						
GRANTEE: HARRIS CIEL F & JAM						
2475/1329	6/30/2021	SW	Q	V	05	1,388,000
GRANTOR: WILDLIGHT LLC						
GRANTEE: MATTAMY JACKSONVILL						

BUILDING NOTES

BUILDING DIMENSIONS

FOP=[YR=2022] W14 S5 BAS=[YR=2022] S1 W16 S16 FOP=[YR=2022] S10 E9 N1 E6 N9 W15$ E15 S9 W6 S6 FGR=[YR=2022] S23 E21 N23 W21$ E21 N32 W14$ E14 N5$ PTR=E15 FUS=[YR=2022] E16 N1 E14 S25 STR=[YR=2022] S7 W10 N7 E10$ W10 S7 E10 S13 W21 N28 W9 N16$ W15 $.

EXTRA FEATURES

LN	OB/XF CODE	DESCRIPTION	BLD	CAP	L	W	UNITS	UT	Adj R	ADJ UNIT PRICE	ORIG COND	YEAR ON	YEAR ACTUAL	Q	% COND	OB/XF MKT VALUE	NOTES
1	0811	CONCRETE B	0	100	0	0	990.00	SF	5.20	5.20	100	2022	2022	3	99	5,097	

LAND DESCRIPTION

TOTAL OB/XF 5,097

LN	USE CODE	CLS	LAND USE DESCRIPTION	CAP	RD	LOC ZONE	FRONT	DEPTH	TOT LND UTS	UNIT TYPE	DT	DPTH FACT	% COND	TOT ADJ	UNIT PRICE	ADJ UNIT PRICE	LAND VALUE	OTHER ADJUSTMENTS AND NOTES	YEAR	DENSITY	DECL	FRZ	YR	CONSRV
1	000100	C	RES	100		PD -	E 0.00	0.00	1.00	LT		1.00	1.00	1.00	75,000.00	75,000.00	75,000							

REVIEW DATE 03/28/2022 BY DJ Total Acres: 0.00 Total Land Value: 75,000 Market: 0 Agricultural: 0 Common: 75,000 PRINTED 07/30/2025 BY SYS