LOT 79
EAST NASSAU WILDLIGHT PH 1C-1
OR 2347/1911

ROBERTSON DAVID W & JESSICA
271 SAWGRASS DR
YULEE, FL 32097

2025

44-2N-27-1003-0079-0000

BUILDING CHARACTERISTICS

ELEMENT	CD	CONSTRUCTION
Exterior Wall	31	HARDIE BRD 100
Roof Structur	03	GABLE/HIP 100
Roof Cover	03	COMP SHNGL 100
Interior Wall	05	DRYWALL 100
Interior Floo	11	CLAY TILE 60
Interior Floo	14	CARPET 40
Air Condition	03	CENTRAL 100
Heating Type	04	AIR DUCTED 100
Bedrooms		5 100
Bathrooms		4.5 100
Frame	02	WOOD FRAME 100
Stories	2.	2. 100
Units		0 100
Occupancy	00	NONE 100
Quality	06	Quality Level 06
DOR CODE	0100	SINGLE FAMILY
MAP NUM		MKT AREA 04
NEIGHBORHOOD/LOC	4086.0100	

AREA TYPE	TOTAL GROSS AREA	PCT OF BASE	YEAR	TOT ADJ AREA	SUBAREA MARKET VALUE
BAS	2,269	100	2021	2,269	332,790
FGR	674	55	2021	371	54,414
FOP	175	30	2021	52	7,627
FOP	180	30	2021	54	7,920
FUS	1,495	100	2021	1,495	219,269
PTO	1,026	5	2025	51	7,481
STR	76	10	2021	8	1,173
TOTALS	5,895			4,300	630,673

MARKET ADJUSTMENTS

TYPE	MDL	EFF. AREA	TOT ADJ PTS	EFF. BASE RATE	REPL. COST NEW	AYB	EYB	ECON	FNCT	MA	NORM	% COND
0900	01	4,300	118.2016	156.03	670,929	2021	2021	0	0	5	1.00	94.00

1 SNGL FAM – 100% - 2025 Heated Area: 3764 HX Base Yr 2025

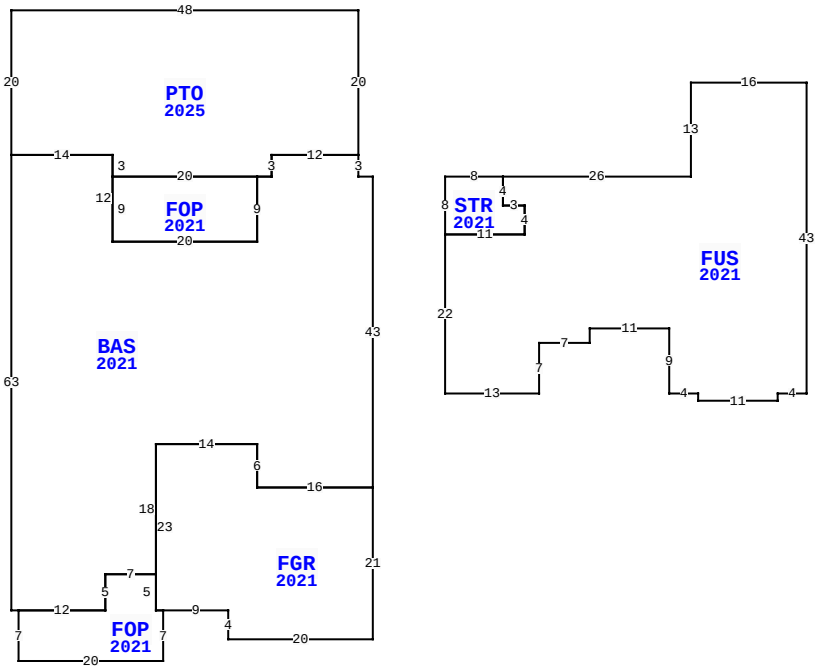

BLD DATE	04/04/2022 NW	LGL DATE
XF DATE		LAND DATE
INC DATE		AG DATE

271 SAWGRASS DR, YULEE

NASSAU COUNTY PROPERTY

PAGE 1 of 1 4

VALUATION SUMMARY

VALUATION BY		STANDARD
Tax Group: 4	Tax Dist:	
BUILDING MARKET VALUE		630,673
TOTAL MARKET OB/XF VALUE		7,979
TOTAL LAND VALUE - MARKET		75,000
TOTAL MARKET VALUE		713,652
SOH/AGL Deduction		0
ASSESSED VALUE		713,652
TOTAL EXEMPTION VALUE	HX HB	50,722
BASE TAXABLE VALUE		662,930
TOTAL JUST VALUE		713,652
NCON VALUE		7,480
INCOME VALUE		
PREVIOUS YEAR MKT VALUE		707,630

PERMIT NUM	DESCRIPTION	AMT	ISSUED
B240011798	RES NEW SCREEN EN	27,300	10/21/2024
CO210015945	CO ISSUED		11/17/2021
21001999	NEW CONSTR	509,659	02/19/2021

SALES DATA

OFF RECORD Number	DATE	TYPE INST	Q / U	V / I	RSN CD	SALE PRICE
2707/347	4/18/2024	WD	Q	I	01	740,000
GRANTOR: BROOKS JEFFREY W & EL						
GRANTEE: ROBERTSON DAVID W &						
2519/0455	11/16/2021	WD	Q	I	01	612,300
GRANTOR: RIVERSIDE HOMES OF N						
GRANTEE: BROOKS JEFFREY W &						

BUILDING NOTES

BUILDING DIMENSIONS

BAS=[YR=2021;ORIG=0,0] W2 N3 W12 S3 W2 S9 W20 N12 W14 S63 E1 E12 N5 E7 N18 E14 S6 E16 N43 $
FUS=[YR=2021;ORIG=18,0] E26 N13 E16 S43 W4 S1 W11 N1 W4 N9 W11 S2 W7 S7 W13 N22 E11 N4 W3 N4 $
FGR=[YR=2021;ORIG=-29,60] E9 S4 E20 N21 W16 N6 W14 S23 E1 $
FOP=[YR=2021;ORIG=-16,0] W20 S9 E20 N9 $
FOP=[YR=2021;ORIG=-49,60] S7 E20 N7 W1 N5 W7 S5 W12 $
STR=[YR=2021;ORIG=10,0] E8 S4 E3 S4 W11 N8 $
PTR=[ORIG=0,0] E10 W10 $
PTO=[YR=2025;ORIG=-50,-3] N20 E48 S20 W12 S3 W2 W20 N3 W14 $
.

EXTRA FEATURES

LN	OB/XF CODE	DESCRIPTION	BLD	CAP	L	W	UNITS	UT	Adj R	ADJ UNIT PRICE	ORIG COND	YEAR ON	YEAR ACTUAL	Q	% COND	OB/XF MKT VALUE	NOTES
1	0855	CONC PAVER	0	100	0	0	806.00	SF	10.00	10.00	100	2021	2021	3	99	7,979	

LAND DESCRIPTION

TOTAL OB/XF 7,979

LN	USE CODE	CLS	LAND USE DESCRIPTION	CAP	RD	LOC ZONE	FRONT	DEPTH	TOT LND UTS	UNIT TYPE	DT	DPTH FACT	% COND	TOT ADJ	UNIT PRICE	ADJ UNIT PRICE	LAND VALUE	OTHER ADJUSTMENTS AND NOTES	YEAR	DENSITY	DECL	FRZ	YR	CONSRV
1	000100	C	RES	100		PD -	E 0.00	0.00	1.00	LT		1.00	1.00	1.00	75,000.00	75,000.00	75,000							

REVIEW DATE 02/11/2025 BY WW Total Acres: 0.00 Total Land Value: 75,000 Market: 0 Agricultural: 0 Common: 75,000 PRINTED 07/30/2025 BY SYS