LOT 31
EAST NASSAU WILDLIGHT PH 1C-1
OR 2347/1911

CROWE ERIN E & MICHAEL W
374 SWEETGUM ST
YULEE, FL 32097

2025

44-2N-27-1003-0031-0000

NASSAU COUNTY PROPERTY

BUILDING CHARACTERISTICS

ELEMENT	CD	CONSTRUCTION
Exterior Wall	31	HARDIE BRD 100
Roof Structur	03	GABLE/HIP 100
Roof Cover	03	COMP SHNGL 100
Interior Wall	05	DRYWALL 100
Interior Floo	13	LVT/LAMNT 50
Interior Floo	14	CARPET 50
Air Condition	03	CENTRAL 100
Heating Type	04	AIR DUCTED 100
Bedrooms		4 100
Bathrooms		2.5 100
Frame	02	WOOD FRAME 100
Stories	2.	2. 100
Units		0 100
Occupancy	00	NONE 100
Quality	02	Quality Level 02
DOR CODE	0100	SINGLE FAMILY
MAP NUM		MKT AREA 04
NEIGHBORHOOD/LOC	4086.0100	

AREA TYPE	TOTAL GROSS AREA	PCT OF BASE	YEAR	TOT ADJ AREA	SUBAREA MARKET VALUE
BAS	1,184	100	2021	1,184	146,051
FGR	420	55	2021	231	28,495
FOP	182	30	2021	55	6,784
FOP	210	30	2021	63	7,772
FUS	1,520	100	2021	1,520	187,498
STR	84	10	2021	8	987
TOTALS	3,600			3,061	377,587

MARKET ADJUSTMENTS

TYPE	MDL	EFF. AREA	TOT ADJ PTS	EFF. BASE RATE	REPL. COST NEW	AYB	EYB	ECON	FNCT		NORM	% COND
0900	01	3,061	94.3920	124.60	381,401	2021	2021	0	0	0	1.00	99.00

1 SNGL FAM – 100% - 2022 Heated Area: 2704 HX Base Yr 2022

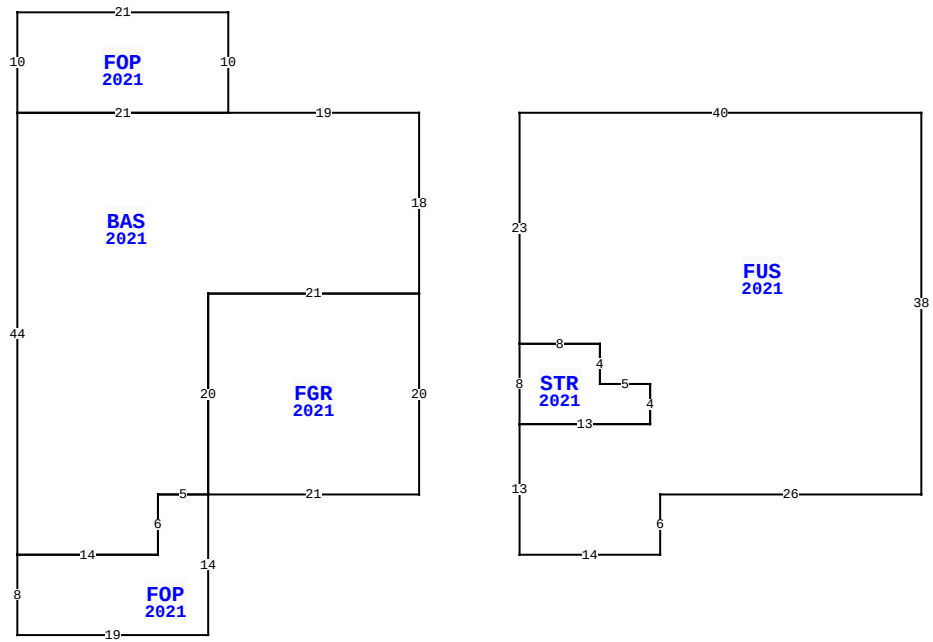

374 SWEETGUM ST, YULEE

BLD DATE	03/21/2023 NW	LGL DATE	
XF DATE		LAND DATE	05/07/2025 MLU
INC DATE		AG DATE	

VALUATION SUMMARY

VALUATION BY		STANDARD
Tax Group: 4	Tax Dist:	
BUILDING MARKET VALUE		377,587
TOTAL MARKET OB/XF VALUE		71,146
TOTAL LAND VALUE - MARKET		75,000
TOTAL MARKET VALUE		523,733
SOH/AGL Deduction		84,904
ASSESSED VALUE		438,829
TOTAL EXEMPTION VALUE	HX HB VX	55,722
BASE TAXABLE VALUE		383,107
TOTAL JUST VALUE		523,733
NCON VALUE		0
INCOME VALUE		
PREVIOUS YEAR MKT VALUE		474,049

PERMIT NUM	DESCRIPTION	AMT	ISSUED
22003855	SWIM POOL	27,500	03/11/2022
22001111	ADDITION	0	02/15/2022
20010712	NEW CONSTR	358,793	11/04/2020

SALES DATA

OFF RECORD Number	DATE	TYPE INST	Q U	V I	RSN CD	SALE PRICE
2454/1446	4/15/2021	SW	Q	I	02	391,900
GRANTOR: MATTAMY JACKSONVILLE						
GRANTEE: CROWE ERIN E & MICH						
2395/0800	9/23/2020	SW	Q	V	05	811,000
GRANTOR: WILDLIGHT LLC						
GRANTEE: MATTAMY JACKSONVILL						

BUILDING NOTES

BUILDING DIMENSIONS

BAS=[YR=2021] W19 FOP=[YR=2021] N10 W21 S10 E21$ W21 S44 FOP=[YR=2021] S8 E19 N14 FGR=[YR=2021] E21 N20 W21 S20$ W5 S6 W14$ E14 N6 E5 N20 E21 N18$ PTR=E10 FUS=[YR=2021] S23 STR=[YR=2021] E8 S4 E5 S4 W13 N8$ E8 S4 E5 S4 W13 S13 E14 N6 E26 N38 W40$ W10$.

EXTRA FEATURES

LN	OB/XF CODE	DESCRIPTION	BLD	CAP	L	W	UNITS	UT	Adj R	ADJ UNIT PRICE	ORIG COND	YEAR ON	YEAR ACTUAL	Q	% COND	OB/XF MKT VALUE	NOTES
1	0811	CONCRETE B	0	100	0	0	981.00	SF	5.20	5.20	100	2021	2021	3	99	5,050	
2	0471	VINYL FNC	0	100	0	0	180.00	LF	32.00	32.00	100	2021	2021	3	96	5,530	
3	0470	VNYL GATE	0	100	0	0	2.00	UT	300.00	300.00	100	2021	2021	3	96	576	
4	0866	POOL FIBER	0	100	30	14	420.00	SF	72.00	72.00	100	2022	2022	3	93	28,123	
5	0911	SCRN RM A	0	100	0	0	1,190.00	SF	21.88	21.88	100	2022	2022	3	93	24,209	
6	0810	CONCRETE A	0	100	0	0	1,190.00	SF	6.50	6.50	100	2022	2022	3	99	7,658	

LAND DESCRIPTION

TOTAL OB/XF 71,146

LN	USE CODE	CLS	LAND USE DESCRIPTION	CAP	RD	LOC ZONE	FRONT	DEPTH	TOT LND UTS	UNIT TYPE	DT	DPTH FACT	% COND	TOT ADJ	UNIT PRICE	ADJ UNIT PRICE	LAND VALUE	OTHER ADJUSTMENTS AND NOTES	YEAR	DENSITY	DECL	FRZ	YR	CONSRV
1	000100	C	RES	100		PD -	E 0.00	0.00	1.00	LT		1.00	1.00	1.00	75,000.00	75,000.00	75,000							

REVIEW DATE 08/03/2022 BY NW Total Acres: 0.00 Total Land Value: 75,000 Market: 0 Agricultural: 0 Common: 75,000 PRINTED 07/30/2025 BY SYS