LOT 12
EAST NASSAU WILDLIGHT PH 1C-1
OR 2347/1911

PRICE BRYAN C & ALEXA L
465 FIREBUSH LN
YULEE, FL 32097

2025

44-2N-27-1003-0012-0000

NASSAU COUNTY PROPERTY

BUILDING CHARACTERISTICS

ELEMENT	CD	CONSTRUCTION
Exterior Wall	31	HARDIE BRD 100
Roof Structur	03	GABLE/HIP 100
Roof Cover	03	COMP SHNGL 100
Interior Wall	05	DRYWALL 100
Interior Floo	13	LVT/LAMNT 70
Interior Floo	14	CARPET 30
Air Condition	03	CENTRAL 100
Heating Type	04	AIR DUCTED 100
Bedrooms		3 100
Bathrooms		2 100
Frame	02	WOOD FRAME 100
Stories	1.	1. 100
Units		0 100
Occupancy	00	NONE 100
Quality	02	Quality Level 02

DOR CODE 0100 SINGLE FAMILY
MAP NUM | MKT AREA 04
NEIGHBORHOOD/LOC 4086.0100

AREA TYPE	TOTAL GROSS AREA	PCT OF BASE	YEAR	TOT ADJ AREA	SUBAREA MARKET VALUE
BAS	1,627	100	2021	1,627	218,528
FGR	483	55	2021	266	35,727
FOP	80	30	2021	24	3,223
FOP	120	30	2021	36	4,835
TOTALS	2,310			1,953	262,314

MARKET ADJUSTMENTS

TYPE	MDL	EFF. AREA	TOT ADJ PTS	EFF. BASE RATE	REPL. COST NEW	AYB	EYB	ECON	FNCT		NORM	% COND
0900	01	1,953	102.7824	135.67	264,964	2021	2021	0	0	0	1.00	99.00

1 SNGL FAM – 0% - 0 Heated Area: 1627 HX Base Yr

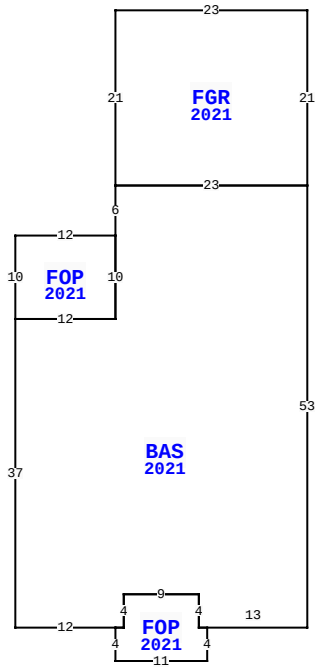

465 FIREBUSH LN, YULEE

BLD DATE	03/21/2023 NW	LGL DATE	
XF DATE		LAND DATE	05/07/2025 MLU
INC DATE		AG DATE	

VALUATION SUMMARY

VALUATION BY	STANDARD
Tax Group: 4	Tax Dist:
BUILDING MARKET VALUE	262,314
TOTAL MARKET OB/XF VALUE	4,229
TOTAL LAND VALUE - MARKET	75,000
TOTAL MARKET VALUE	341,543
SOH/AGL Deduction	10,708
ASSESSED VALUE	330,835
TOTAL EXEMPTION VALUE	0
BASE TAXABLE VALUE	330,835
TOTAL JUST VALUE	341,543
NCON VALUE	0
INCOME VALUE	
PREVIOUS YEAR MKT VALUE	300,759

PERMIT NUM	DESCRIPTION	AMT	ISSUED
21007955	CO ISSUED	0	06/17/2021
21000698	NEW CONSTR	229,968	01/22/2021

SALES DATA

OFF RECORD Number	DATE	TYPE INST	Q / U	V / I	RSN CD	SALE PRICE
2478/1424	7/06/2021	SW	Q	I	01	300,900
GRANTOR: MATTAMY JACKSONVILLE						
GRANTEE: PRICE BRYAN C & ALE						
2371/0963	6/25/2020	SW	Q	V	05	905,000
GRANTOR: WILDLIGHT LLC						
GRANTEE: MATTAMY JACKSONVILL						

BUILDING NOTES

BUILDING DIMENSIONS

FGR=[YR=2021] W23 S21 BAS=[YR=2021] S6 FOP=[YR=2021] W12 S10 E12 N10$ S10 W12 S37 E12 FOP=[YR=2021] S4 E11 N4 W1 N4 W9 S4 W1$ E1 N4 E9 S4 E13 N53 W23$ E23 N21$.

EXTRA FEATURES

LN	OB/XF CODE	DESCRIPTION	BLD	CAP	L	W	UNITS	UT	Adj R	ADJ UNIT PRICE	ORIG COND	YEAR ON	YEAR ACTUAL	Q	% COND	OB/XF MKT VALUE	NOTES
1	0812	CONCRETE C	0	0	0	0	1,068.00	SF	4.00	4.00	100	2021	2021	3	99	4,229	

LAND DESCRIPTION

TOTAL OB/XF 4,229

LN	USE CODE	CLS	LAND USE DESCRIPTION	CAP	RD	LOC ZONE	FRONT	DEPTH	TOT LND UTS	UNIT TYPE	DT	DPTH FACT	% COND	TOT ADJ	UNIT PRICE	ADJ UNIT PRICE	LAND VALUE	OTHER ADJUSTMENTS AND NOTES	YEAR	DENSITY	DECL	FRZ	YR	CONSRV
1	000100	C	RES	0		PD -	E 0.00	0.00	1.00	LT		1.00	1.00	1.00	75,000.00	75,000.00	75,000							

REVIEW DATE 07/26/2021 BY NW Total Acres: 0.00 Total Land Value: 75,000 Market: 0 Agricultural: 0 Common: 75,000 PRINTED 07/30/2025 BY SYS