LOT 79
ESMT PT OR 2176/356
EAST NASSAU-WILDLIGHT PHASE 1A

COL STEPHEN & JULIANA
234 PONDER CIR
YULEE, FL 32097

2025

44-2N-27-1000-0079-0000

BUILDING CHARACTERISTICS

ELEMENT	CD	CONSTRUCTION
Exterior Wall	10	ABOVE AVG 100
Roof Structur	03	GABLE/HIP 100
Roof Cover	03	COMP SHNGL 100
Interior Wall	05	DRYWALL 90
Interior Wall	06	CUST PANEL 10
Interior Floo	11	CLAY TILE 50
Interior Floo	14	CARPET 50
Air Condition	03	CENTRAL 100
Heating Type	04	AIR DUCTED 100
Bedrooms		5 100
Bathrooms		3 100
Frame	02	WOOD FRAME 100
Stories	2.	2. 100
Units		0 100
Occupancy	00	NONE 100
Quality	03	Quality Level 03

DOR CODE	0100	SINGLE FAMILY	
MAP NUM		MKT AREA	04
NEIGHBORHOOD/LOC	4086.00		

AREA TYPE	TOTAL GROSS AREA	PCT OF BASE	YEAR	TOT ADJ AREA	SUBAREA MARKET VALUE
BAS	2,141	100	2019	2,141	288,144
FDG	484	60	2019	290	39,029
FOP	216	30	2019	65	8,747
FOP	216	30	2019	65	8,747
FSP	372	40	2019	149	20,053
FUS	814	100	2019	814	109,551
UST	72	45	2019	32	4,307
TOTALS	4,315			3,556	478,578

MARKET ADJUSTMENTS

TYPE	MDL	EFF. AREA	TOT ADJ PTS	EFF. BASE RATE	REPL. COST NEW	AYB	EYB	ECON	FNCT		NORM	% COND
0900	01	3,556	104.0400	137.33	488,345	2019	2019	0	0	0	2.00	98.00

1 SNGL FAM – 100% - 2021 Heated Area: 2955 HX Base Yr 2021

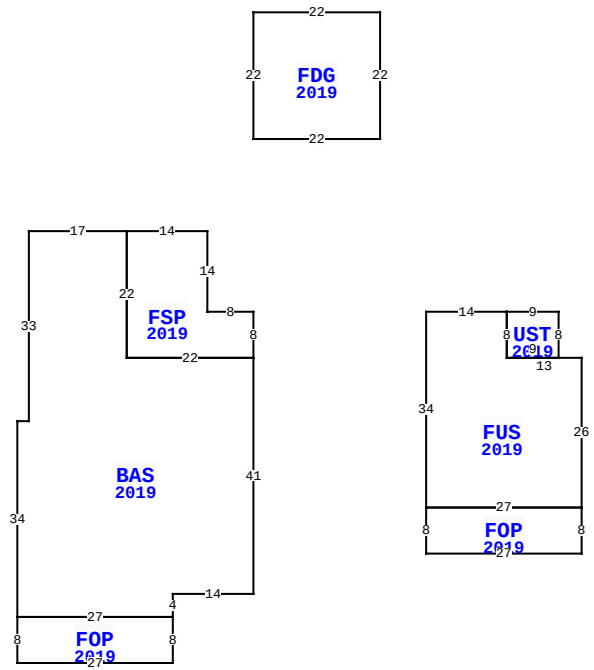

234 PONDER CIR, YULEE

BLD DATE	04/04/2022 NW	LGL DATE	
XF DATE		LAND DATE	
INC DATE		AG DATE	

NASSAU COUNTY PROPERTY

PAGE 1 of 1 4

VALUATION SUMMARY

VALUATION BY		STANDARD
Tax Group: 4	Tax Dist:	
BUILDING MARKET VALUE		478,578
TOTAL MARKET OB/XF VALUE		9,992
TOTAL LAND VALUE - MARKET		100,000
TOTAL MARKET VALUE		588,570
SOH/AGL Deduction		140,311
ASSESSED VALUE		448,259
TOTAL EXEMPTION VALUE	HX HB	50,722
BASE TAXABLE VALUE		397,537
TOTAL JUST VALUE		588,570
NCON VALUE		0
INCOME VALUE		
PREVIOUS YEAR MKT VALUE		563,287

PERMIT NUM	DESCRIPTION	AMT	ISSUED
19001938	CO ISSUED	0	02/27/2019
18010392	NEW CONSTR	364,734	10/15/2018
18010394	GARAGE	22,752	10/15/2018

SALES DATA

OFF RECORD Number	DATE	TYPE INST	Q / U	V / I	RSN CD	SALE PRICE
2351/1560	3/25/2020	WD	Q	I	01	504,000
GRANTOR: BAUM CORY & CATHERINE						
GRANTEE: COL STEPHEN & JULIA						
2258/1495	2/28/2019	WD	Q	I	01	425,500
GRANTOR: DREAM FINDERS HOMES L						
GRANTEE: BAUM CORY & CATHERI						

BUILDING NOTES

BUILDING DIMENSIONS

FSP=[YR=2019] W8 N14 W14 BAS=[YR=2019] W17 S33 W2 S34 FOP=[YR=2019] S8 E27 N8 W27 $ E27 N4 E14 N41 W22 N22 $ S22 E22 N8 $ PTR= E30 FUS=[YR=2019] E14 UST=[YR=2019] E9 S8 W9 N8 $ S8 E13 S26 FOP=[YR=2019] S8 W27 N8 E27 $ W27 N34 $ W30 $ PTR= N30 FDG=[YR=2019] N22 E22 S22 W22 $ S30 $.

EXTRA FEATURES

LN	OB/XF CODE	DESCRIPTION	BLD	CAP	L	W	UNITS	UT	Adj R	ADJ UNIT PRICE	ORIG COND	YEAR ON	YEAR ACTUAL	Q	% COND	OB/XF MKT VALUE	NOTES
1	0811	CONCRETE B	0	100	0	0	1,981.00	SF	5.20	5.20	100	2019	2019	3	97	9,992	

LAND DESCRIPTION

TOTAL OB/XF 9,992

LN	USE CODE	CLS	LAND USE DESCRIPTION	CAP	RD	LOC ZONE	FRONT	DEPTH	TOT LND UTS	UNIT TYPE	DT	DPTH FACT	% COND	TOT ADJ	UNIT PRICE	ADJ UNIT PRICE	LAND VALUE	OTHER ADJUSTMENTS AND NOTES	YEAR	DENSITY	DECL	FRZ	YR	CONSRV
1	000100	C	RES	100		PD -	E 0.00	0.00	1.00	LT		1.00	1.00	1.00	100,000.00	100,000.00	100,000							

REVIEW DATE 05/01/2019 BY DJ Total Acres: 0.00 Total Land Value: 100,000 Market: 0 Agricultural: 0 Common: 100,000 PRINTED 07/30/2025 BY SYS