LOT 70
ESMT PT OR 2176/356
EAST NASSAU-WILDLIGHT PHASE 1A

DUGAN NATHAN J & KATHARINE L
246 FLOCO AVE
YULEE, FL 32097

2025

44-2N-27-1000-0070-0000

BUILDING CHARACTERISTICS

ELEMENT	CD	CONSTRUCTION
Exterior Wall	31	HARDIE BRD 100
Roof Structur	03	GABLE/HIP 100
Roof Cover	03	COMP SHNGL 100
Interior Wall	05	DRYWALL 100
Interior Floo	11	CLAY TILE 60
Interior Floo	14	CARPET 40
Air Condition	03	CENTRAL 100
Heating Type	04	AIR DUCTED 100
Bedrooms		4 100
Bathrooms		3.5 100
Frame	02	WOOD FRAME 100
Stories	2.	2. 100
Units		0 100
Occupancy	00	NONE 100
Quality	03	Quality Level 03

DOR CODE	0100	SINGLE FAMILY	
MAP NUM		MKT AREA	04
NEIGHBORHOOD/LOC	4086.00		

AREA TYPE	TOTAL GROSS AREA	PCT OF BASE	YEAR	TOT ADJ AREA	SUBAREA MARKET VALUE
BAS	2,430	100	2019	2,430	320,322
FGR	816	55	2019	449	59,187
FOP	168	30	2019	50	6,591
FOP	168	30	2019	50	6,591
FSP	363	40	2019	145	19,114
FUS	435	100	2019	435	57,342
FUS	525	100	2019	525	69,206
TOTALS	4,905			4,084	538,352

MARKET ADJUSTMENTS

TYPE	MDL	EFF. AREA	TOT ADJ PTS	EFF. BASE RATE	REPL. COST NEW	AYB	EYB	ECON	FNCT		NORM	% COND
0900	01	4,084	101.9040	134.51	549,339	2019	2019	0	0	0	2.00	98.00

1 SNGL FAM – 100% - 2020 Heated Area: 3390 HX Base Yr 2020

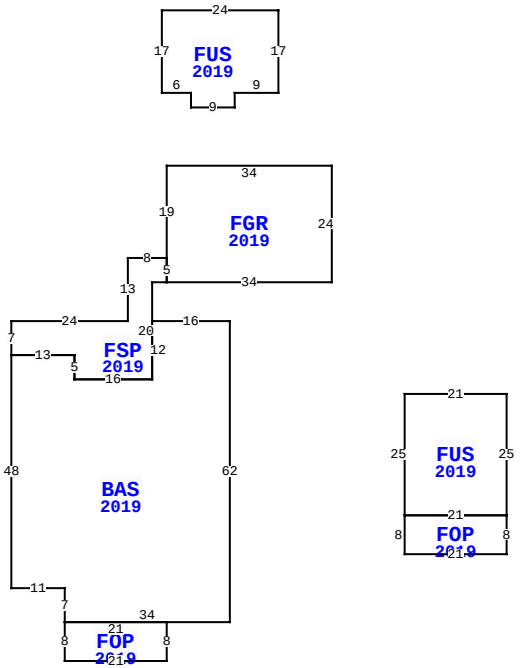

246 FLOCO AV, YULEE

BLD DATE	04/04/2022	NW	LGL DATE
XF DATE			LAND DATE
INC DATE			AG DATE

NASSAU COUNTY PROPERTY

PAGE 1 of 1 4

VALUATION SUMMARY

VALUATION BY		STANDARD
Tax Group: 4	Tax Dist:	
BUILDING MARKET VALUE		538,352
TOTAL MARKET OB/XF VALUE		64,420
TOTAL LAND VALUE - MARKET		100,000
TOTAL MARKET VALUE		702,772
SOH/AGL Deduction		180,069
ASSESSED VALUE		522,703
TOTAL EXEMPTION VALUE	HX HB VX	55,722
BASE TAXABLE VALUE		466,981
TOTAL JUST VALUE		702,772
NCON VALUE		0
INCOME VALUE		
PREVIOUS YEAR MKT VALUE		678,954

PERMIT NUM	DESCRIPTION	AMT	ISSUED
19001378	CO ISSUED	0	02/13/2019
18009594	SWIM POOL	0	01/01/2019
18007402	NEW CONSTR	449,289	07/20/2018

SALES DATA

OFF RECORD Number	DATE	TYPE INST	Q U	V I	RSN CD	SALE PRICE
2258/0966	2/27/2019	WD	Q	I	01	610,500
GRANTOR: D S WARE HOMES LLC						
GRANTEE: DUGAN NATHAN J & K						
2203/1180	6/13/2018	QC	U	V	11	100
GRANTOR: RAYDIENT LLC D/B/A RA						
GRANTEE: WILDLIGHT LLC ET AL						

BUILDING NOTES

BUILDING DIMENSIONS

FGR=[YR=2019] W34 S19 FSP=[YR=2019] W8 S13 W24 S7 BAS=[YR=2019] S48 E11 S7 FOP=[YR=2019] S8 E21 N8 W21 $ E34 N62 W16 S12 W16 N5 W13 $ E13 S5 E16 N20 E3 N5 $ S5 E34 N24 $ PTR= N15 W35 FUS=[YR=2019] N17 E24 S17 W9 S3 W9 N3 W6 $ S15 E35 $ PTR= E15 S80 FOP=[YR=2019] N8 FUS=[YR=2019] N25 E21 S25 W21 $ E21 S8 W21 $W15 N80$.

EXTRA FEATURES

LN	OB/XF CODE	DESCRIPTION	BLD	CAP	L	W	UNITS	UT	Adj R	ADJ UNIT PRICE	ORIG COND	YEAR ON	YEAR ACTUAL	Q	% COND	OB/XF MKT VALUE	NOTES
1	0855	CONC PAVER	0	100	0	0	1,058.00	SF	10.00	10.00	100	2019	2019	3	97	10,263	
2	0855	CONC PAVER	0	100	0	0	40.00	SF	10.00	10.00	100	2019	2019	3	97	388	
3	0476	VF 6 SBPL	0	100	0	0	78.00	LF	32.00	32.00	100	2019	2019	3	94	2,346	
4	0470	VNYL GATE	0	100	0	0	1.00	UT	300.00	300.00	100	2019	2019	3	94	282	
5	0911	SCRN RM A	0	100	0	0	1,100.00	SF	17.50	17.50	100	2019	2019	3	82	15,785	
6	0861	POOL GUNIT	0	100	0	0	465.00	SF	85.00	85.00	100	2019	2019	3	87	34,387	
7	1134	LANDSCP BL	0	100	0	0	92.00	SF	3.00	3.00	100	2019	2019	3	99	273	
8	0462	ST/AL FNC	0	100	0	0	80.00	SF	10.00	10.00	100	2019	2019	3	87	696	

LAND DESCRIPTION

TOTAL OB/XF 64,420

LN	USE CODE	CLS	LAND USE DESCRIPTION	CAP	RD	LOC ZONE	FRONT	DEPTH	TOT LND UTS	UNIT TYPE	DT	DPTH FACT	% COND	TOT ADJ	UNIT PRICE	ADJ UNIT PRICE	LAND VALUE	OTHER ADJUSTMENTS AND NOTES	YEAR	DENSITY	DECL	FRZ	YR	CONSRV
1	000100	C	RES	100		PD -	E 0.00	0.00	1.00	LT		1.00	1.00	1.00	100,000.00	100,000.00	100,000							

REVIEW DATE 05/01/2019 BY DJ Total Acres: 0.00 Total Land Value: 100,000 Market: 0 Agricultural: 0 Common: 100,000 PRINTED 07/30/2025 BY SYS