LOT 66
ESMT PT OR 2176/356
EAST NASSAU-WILDLIGHT PHASE 1A

BARNACK NICOLA LYN
233 FLOCO AVE
YULEE, FL 32097

2025

44-2N-27-1000-0066-0000

NASSAU COUNTY PROPERTY

BUILDING CHARACTERISTICS

ELEMENT	CD	CONSTRUCTION
Exterior Wall	31	HARDIE BRD 100
Roof Structur	03	GABLE/HIP 100
Roof Cover	03	COMP SHNGL 100
Interior Wall	05	DRYWALL 100
Interior Floo	11	CLAY TILE 50
Interior Floo	14	CARPET 50
Air Condition	03	CENTRAL 100
Heating Type	04	AIR DUCTED 100
Bedrooms		4 100
Bathrooms		3 100
Frame	02	WOOD FRAME 100
Stories	2.	2. 100
Units		0 100
Occupancy	00	NONE 100
Quality	03	Quality Level 03
DOR CODE	0100	SINGLE FAMILY
MAP NUM		MKT AREA 04
NEIGHBORHOOD/LOC	4086.00	

AREA TYPE	TOTAL GROSS AREA	PCT OF BASE	YEAR	TOT ADJ AREA	SUBAREA MARKET VALUE
BAS	2,141	100	2019	2,141	291,752
FDG	484	60	2019	290	39,519
FOP	176	30	2019	53	7,223
FOP	216	30	2019	65	8,857
FOP	216	30	2019	65	8,857
FUS	778	100	2019	778	106,017
STR	36	10	2019	4	545
UST	72	45	2019	32	4,361
TOTALS	4,119			3,428	467,130

MARKET ADJUSTMENTS

TYPE	MDL	EFF. AREA	TOT ADJ PTS	EFF. BASE RATE	REPL. COST NEW	AYB	EYB	ECON	FNCT		NORM	% COND
0900	01	3,428	105.3400	139.05	476,663	2019	2019	0	0	0	2.00	98.00

1 SNGL FAM – 100% - 2021 Heated Area: 2919 HX Base Yr 2021

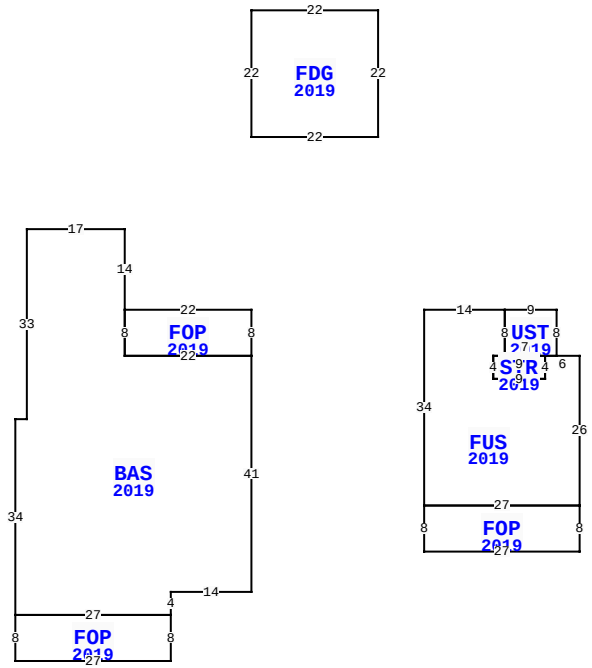

233 FLOCO AV, YULEE

BLD DATE	04/04/2022 NW	LGL DATE	
XF DATE		LAND DATE	
INC DATE		AG DATE	

NASSAU COUNTY PROPERTY — VALUATION SUMMARY

VALUATION BY		STANDARD
Tax Group: 4	Tax Dist:	
BUILDING MARKET VALUE		467,130
TOTAL MARKET OB/XF VALUE		2,704
TOTAL LAND VALUE - MARKET		60,000
TOTAL MARKET VALUE		529,834
SOH/AGL Deduction		135,796
ASSESSED VALUE		394,038
TOTAL EXEMPTION VALUE	HX HB	50,722
BASE TAXABLE VALUE		343,316
TOTAL JUST VALUE		529,834
NCON VALUE		0
INCOME VALUE		
PREVIOUS YEAR MKT VALUE		507,359

PERMIT NUM	DESCRIPTION	AMT	ISSUED
18012074	NEW CONSTR	355,494	12/11/2018
18011798	GARAGE	22,752	11/30/2018

SALES DATA

OFF RECORD Number	DATE	TYPE INST	Q / U	V / I	RSN CD	SALE PRICE
2735/1433	9/03/2024	QC	U	I	11	100
GRANTOR: BARNACK JOSHUA M						
GRANTEE: BARNACK NICOLA L						
2725/747	7/10/2024	FJ	U	I	11	0
GRANTOR: BARNACK JOSHUA M						
GRANTEE: BARNACK NICOLA LYN						

BUILDING NOTES

BUILDING DIMENSIONS

FOP=[YR=2019] W22 BAS=[YR=2019] N14 W17 S33 W2 S34
FOP=[YR=2019] S8 E27 N8 W27 $ E27 N4 E14 N41 W22 N8 $ S8 E22
N8 $ PTR= E30 FUS=[YR=2019] E14 UST=[YR=2019] E9 S8W2
STR=[YR=2019] S4 W9 N4 E9$ W7 N8$ S8 W2 S4 E9 N4 E6 S26
FOP=[YR=2019] S8 W27 N8 E27 $ W27 N34 $ W30 $ PTR= N30
FDG=[YR=2019] N22 E22 S22 W22 $ S30$.

EXTRA FEATURES

LN	OB/XF CODE	DESCRIPTION	BLD	CAP	L	W	UNITS	UT	Adj R	ADJ UNIT PRICE	ORIG COND	YEAR ON	YEAR ACTUAL	Q	% COND	OB/XF MKT VALUE	NOTES
1	0811	CONCRETE B	0	100	0	0	536.00	SF	5.20	5.20	100	2019	2019	3	97	2,704	

LAND DESCRIPTION

TOTAL OB/XF 2,704

LN	USE CODE	CLS	LAND USE DESCRIPTION	CAP	RD	LOC ZONE	FRONT	DEPTH	TOT LND UTS	UNIT TYPE	DT	DPTH FACT	% COND	TOT ADJ	UNIT PRICE	ADJ UNIT PRICE	LAND VALUE	OTHER ADJUSTMENTS AND NOTES	YEAR	DENSITY	DECL	FRZ	YR	CONSRV
1	000100	C	RES	100		PD -	E 0.00	0.00	1.00	LT		1.00	1.00	1.00	60,000.00	60,000.00	60,000							

REVIEW DATE 07/12/2019 BY RK Total Acres: 0.00 Total Land Value: 60,000 Market: 0 Agricultural: 0 Common: 60,000 PRINTED 07/30/2025 BY SYS