IN OR 1782/1450
ESMT PT OR 1568/223
ESMT PT OR 1568/217

OM MAA SHARAN INC/
462577 STATE ROAD 200
YULEE, FL 32097

2025

44-2N-27-0000-0001-0250

NASSAU COUNTY PROPERTY

BUILDING CHARACTERISTICS

ELEMENT	CD	CONSTRUCTION
Exterior Wall	17	CB STUCCO 100
Roof Structur	04	WOOD TRUSS 100
Roof Cover	04	BUILT-UP 60
Roof Cover	11	SLATE 40
Interior Wall	05	DRYWALL 100
Interior Floo	14	CARPET 70
Interior Floo	08	SHT VINYL 30
Ceiling	01	FIN.SUSPD 100
Air Condition	03	CENTRAL 100
Heating Type	04	AIR DUCTED 100
Fixtures		214 100
Frame	03	MASONRY 100
Story Height		10 100
RMS		62 100
Units		0 100
Occupancy	00	NONE 100
Quality	03	Quality Level 03
DOR CODE	3900	HOTELS AND MOTELS
MAP NUM		MKT AREA 04
NEIGHBORHOOD/LOC	4001.00	

AREA TYPE	TOTAL GROSS AREA	PCT OF BASE	YEAR	TOT ADJ AREA	SUBAREA MARKET VALUE
BAS	10,987	100	2008	10,987	1,344,123
FCP	1,152	20	2008	230	28,138
FOP	24	20	2008	5	612
FOP	28	20	2008	6	734
FOP	36	20	2008	7	856
FOP	72	20	2008	14	1,712
FOP	510	20	2008	102	12,478
FST	84	50	2008	42	5,138
FST	84	50	2008	42	5,138
FST	84	50	2008	42	5,138
TOTALS	38,408			35,321	4,321,086

MARKET ADJUSTMENTS

TYPE	MDL	EFF. AREA	TOT ADJ PTS	EFF. BASE RATE	REPL. COST NEW	AYB	EYB	ECON	FNCT		NORM	% COND
3904	07	35,321	95.2185	139.02	4,910,325	2008	2008	0	0	0	12.00	88.00

1 LMTD HOTEL – 0% - 0 Heated Area: 33733 HX Base Yr

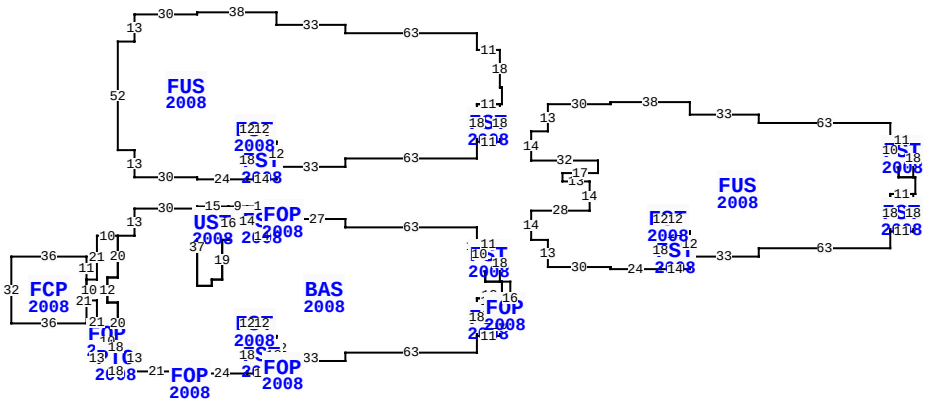

** This building has 23 Sub-Areas

462577 SR 200, YULEE

BLD DATE	08/05/2020	KK	LGL DATE
XF DATE	08/05/2020	KK	LAND DATE
INC DATE	04/30/2025	REA	AG DATE

VALUATION SUMMARY

VALUATION BY	DIRECT_CAP
Tax Group: 4	Tax Dist:
BUILDING MARKET VALUE	4,509,260
TOTAL MARKET OB/XF VALUE	0
TOTAL LAND VALUE - MARKET	0
TOTAL MARKET VALUE	5,124,159
SOH/AGL Deduction	1,387,699
ASSESSED VALUE	3,736,460
TOTAL EXEMPTION VALUE	0
BASE TAXABLE VALUE	3,736,460
TOTAL JUST VALUE	5,124,159
NCON VALUE	0
INCOME VALUE	5,124,159
PREVIOUS YEAR MKT VALUE	5,810,536

BEST WESTERN PLUS

PERMIT NUM	DESCRIPTION	AMT	ISSUED
B21585	SWIM POOL	61,000	06/01/2008
M13707	MECH OTHER	0	03/01/2008
B20926	TEMP TRAILER	0	01/01/2008
E20289	ELEC OTHER	340,379	12/01/2007
R10171	REPAIR/RRF	115,000	03/01/2007

SALES DATA

OFF RECORD Number	DATE	TYPE INST	Q / U	V / I	RSN CD	SALE PRICE
1782/1450	3/08/2012	WD	Q	I	02	1,900,000
GRANTOR: HMP PROPERTIES II LLC						
GRANTEE: OM MAA SHARAN INC						
1782/1354	3/08/2012	WD	U	I	11	1,525,000
GRANTOR: COMMUNITY SOUTH BANK						
GRANTEE: HMP PROPERTIES II L						

BUILDING NOTES

EXTRA FEATURES

LN	OB/XF CODE	DESCRIPTION	BLD	CAP	L	W	UNITS	UT	Adj R	ADJ UNIT PRICE	ORIG COND	YEAR ON	YEAR ACTUAL	Q	% COND	OB/XF MKT VALUE	NOTES
1	0803	ASPHALT C	0	0	0	0	36,994.00	SF	2.00	2.00	100	2008	2008	3	60	44,393	
2	0400	CONC CURB	0	0	0	0	1,745.00	LF	15.00	15.00	100	2008	2008	3	91	23,819	
3	0810	CONCRETE A	0	0	0	0	4,099.00	SF	6.50	6.50	100	2008	2008	3	88	23,446	
4	0861	POOL GUNIT	0	0	0	0	640.00	SF	85.00	85.00	100	2008	2008	3	48	26,112	
5	0855	CONC PAVER	0	0	0	0	1,181.00	SF	10.00	10.00	100	2008	2008	3	88	10,393	
6	0878	SPA	0	0	0	0	1.00	UT	5,000.00	5,000.00	100	2008	2008	3	31	1,550	
7	0422	CL FNC 4'	0	0	0	0	980.00	LF	15.00	15.00	100	2002	2002	3	55	8,085	
8	1126	CB/STC 8"	0	0	36	0	216.00	SF	8.00	8.00	100	2008	2008	3	88	1,521	
9	0810	CONCRETE A	0	0	12	12	144.00	SF	6.50	6.50	100	2008	2008	3	88	824	
10	0418	EXHST FAN	0	0	0	0	3.00	UT	400.00	400.00	100	2008	2008	3	31	372	

TOTAL OB/XF 140,515

BUILDING DIMENSIONS

FUS=[YR=2008;LABEL=3RD FLR;ORIG=-172,-89] E8 N13 E30 N1 E38 S6 E33 S4 E63 S8 E11 S18 E1 S8 W1 W11 S18 S8 W63 S4 W33 N12 W7 N12 W7 S12 S18 W24 N1 W30 N13 W8 N52 $
BAS=[YR=2008;ORIG=0,0] W63 N4 W27 W6 S8 W14 N14 W9 S16 W3 S19 W5 S3 W7 N37 W30 S13 W8 S20 W5 S12 E5 S20 E8 S13 E21 E2 E7 S1 E24 N18 N12 E7 S12 E7 S12 E33 N4 E63 N8 N18 E12 N8 W1 W7 N8 W4 N18 $
FUS=[YR=2008;LABEL=2ND FLR;ORIG=26,-46] E8 N13 E30 N1 E38 S6 E33 S4 E63 S8 S10 E4 S8 E7 E1 S8 W1 W11 S18 S8 W63 S4 W33 N12 W7 N12 W7 S12 S18 W24 N1 W30 N13 W8 N14 E28 N14 W13 N4 E17 N6 W32 N14 $
FCP=[YR=2008;ORIG=-187,25] N11 W36 S32 E36 N21 $

LAND DESCRIPTION

LN	USE CODE	CLS	LAND USE DESCRIPTION	CAP	RD	LOC ZONE	FRONT	DEPTH	TOT LND UTS	UNIT TYPE	DT	DPTH FACT	% COND	TOT ADJ	UNIT PRICE	ADJ UNIT PRICE	LAND VALUE	OTHER ADJUSTMENTS AND NOTES	YEAR	DENSITY	DECL	FRZ	YR	CONSRV
1	003900	C	MOTEL	0	0004	CHT	0.00	0.00	121,096.00	SF		1.00	1.00	0.85	14.25	12.11	1,466,775							

REVIEW DATE 05/21/2025 BY KWA Total Acres: 2.78 Total Land Value: 614,899 Market: 0 Agricultural: 0 Common: 0 PRINTED 07/30/2025 BY SYS

IN OR 1782/1450
ESMT PT OR 1568/223
ESMT PT OR 1568/217

OM MAA SHARAN INC/
462577 STATE ROAD 200
YULEE, FL 32097

2025

44-2N-27-0000-0001-0250

BUILDING CHARACTERISTICS

ELEMENT	CD	CONSTRUCTION

DOR CODE	3900	HOTELS AND MOTELS	
MAP NUM		MKT AREA	04
NEIGHBORHOOD/LOC	4001.00		

AREA TYPE	TOTAL GROSS AREA	PCT OF BASE	YEAR	TOT ADJ AREA	SUBAREA MARKET VALUE
TOTALS					

MARKET ADJUSTMENTS

TYPE	MDL	EFF. AREA	TOT ADJ PTS	EFF. BASE RATE	REPL. COST NEW	AYB	EYB	ECON	FNCT		NORM	% COND

BLD DATE	08/05/2020	KK	LGL DATE
XF DATE	08/05/2020	KK	LAND DATE
INC DATE	04/30/2025	REA	AG DATE

NASSAU COUNTY PROPERTY

PAGE 2 of 3 4

VALUATION SUMMARY

VALUATION BY	DIRECT_CAP
Tax Group: 4	Tax Dist:
BUILDING MARKET VALUE	4,509,260
TOTAL MARKET OB/XF VALUE	0
TOTAL LAND VALUE - MARKET	0
TOTAL MARKET VALUE	5,124,159
SOH/AGL Deduction	1,387,699
ASSESSED VALUE	3,736,460
TOTAL EXEMPTION VALUE	0
BASE TAXABLE VALUE	3,736,460
TOTAL JUST VALUE	5,124,159
NCON VALUE	0
INCOME VALUE	5,124,159
PREVIOUS YEAR MKT VALUE	5,810,536

PERMIT NUM	DESCRIPTION	AMT	ISSUED

SALES DATA

OFF RECORD Number	DATE	TYPE INST	Q / U	V / I	RSN CD	SALE PRICE
1782/1450	3/08/2012	WD	Q	I	02	1,900,000
GRANTOR: HMP PROPERTIES II LLC						
GRANTEE: OM MAA SHARAN INC						
1782/1354	3/08/2012	WD	U	I	11	1,525,000
GRANTOR: COMMUNITY SOUTH BANK						
GRANTEE: HMP PROPERTIES II L						

BUILDING NOTES

BUILDING DIMENSIONS

EXTRA FEATURES

LN	OB/XF CODE	DESCRIPTION	BLD	CAP	L	W	UNITS	UT	Adj R	ADJ UNIT PRICE	ORIG COND	YEAR ON	YEAR ACTUAL	Q	% COND	OB/XF MKT VALUE	NOTES
11	0462	ST/AL FNC	0	0	117	0	585.00	SF	10.00	10.00	100	2008	2008	3	48	2,808	
12	4950	BOLLARD	0	0	0	0	4.00	UT	100.00	100.00	100	2008	2008	3	100	400	
14	0972	ST LGHT UN	0	0	0	0	15.00	UT	2,530.00	2,530.00	100	2008	2008	3	72	27,324	
15	0975	ST LT/ARM	0	0	0	0	2.00	UT	500.00	500.00	100	2008	2008	3	72	720	
16	0402	CONC BUMPE	0	0	0	0	11.00	UT	25.00	25.00	100	2008	2008	3	91	250	
17	0505	FLAGPOLE A	0	0	0	0	30.00	LF	50.00	50.00	100	2008	2008	3	31	465	
18	0505	FLAGPOLE A	0	0	0	0	20.00	LF	50.00	50.00	100	2008	2008	3	31	310	
19	0505	FLAGPOLE A	0	0	0	0	20.00	LF	50.00	50.00	100	2008	2008	3	31	310	
21	0476	VF 6 SBPL	0	0	0	0	66.00	LF	32.00	32.00	100	2008	2008	3	72	1,521	
22	0470	VNYL GATE	0	0	0	0	3.00	UT	300.00	300.00	100	2008	2008	3	72	648	

TOTAL OB/XF 34,756

LAND DESCRIPTION

LN	USE CODE	CLS	LAND USE DESCRIPTION	CAP	RD	LOC ZONE	FRONT	DEPTH	TOT LND UTS	UNIT TYPE	DT	DPTH FACT	% COND	TOT ADJ	UNIT PRICE	ADJ UNIT PRICE	LAND VALUE	OTHER ADJUSTMENTS AND NOTES	YEAR	DENSITY	DECL	FRZ	YR	CONSRV

REVIEW DATE 05/21/2025 BY KWA Total Acres: 2.78 Total Land Value: 614,899 Market: 0 Agricultural: 0 Common: 0 PRINTED 07/30/2025 BY SYS

IN OR 1782/1450
ESMT PT OR 1568/223
ESMT PT OR 1568/217

OM MAA SHARAN INC/
462577 STATE ROAD 200
YULEE, FL 32097

2025

44-2N-27-0000-0001-0250

BUILDING CHARACTERISTICS

ELEMENT	CD	CONSTRUCTION

DOR CODE	3900	HOTELS AND MOTELS	
MAP NUM		MKT AREA	04
NEIGHBORHOOD/LOC	4001.00		

AREA TYPE	TOTAL GROSS AREA	PCT OF BASE	YEAR	TOT ADJ AREA	SUBAREA MARKET VALUE
TOTALS					

MARKET ADJUSTMENTS

TYPE	MDL	EFF. AREA	TOT ADJ PTS	EFF. BASE RATE	REPL. COST NEW	AYB	EYB	ECON	FNCT		NORM	% COND

BLD DATE	08/05/2020	KK	LGL DATE
XF DATE	08/05/2020	KK	LAND DATE
INC DATE	04/30/2025	REA	AG DATE

NASSAU COUNTY PROPERTY

PAGE 3 of 3 4

VALUATION SUMMARY

VALUATION BY	DIRECT_CAP
Tax Group: 4	Tax Dist:
BUILDING MARKET VALUE	4,509,260
TOTAL MARKET OB/XF VALUE	0
TOTAL LAND VALUE - MARKET	0
TOTAL MARKET VALUE	5,124,159
SOH/AGL Deduction	1,387,699
ASSESSED VALUE	3,736,460
TOTAL EXEMPTION VALUE	0
BASE TAXABLE VALUE	3,736,460
TOTAL JUST VALUE	5,124,159
NCON VALUE	0
INCOME VALUE	5,124,159
PREVIOUS YEAR MKT VALUE	5,810,536

PERMIT NUM	DESCRIPTION	AMT	ISSUED

SALES DATA

OFF RECORD Number	DATE	TYPE INST	Q / U	V / I	RSN CD	SALE PRICE
1782/1450	3/08/2012	WD	Q	I	02	1,900,000
GRANTOR: HMP PROPERTIES II LLC						
GRANTEE: OM MAA SHARAN INC						
1782/1354	3/08/2012	WD	U	I	11	1,525,000
GRANTOR: COMMUNITY SOUTH BANK						
GRANTEE: HMP PROPERTIES II L						

BUILDING NOTES

BUILDING DIMENSIONS

EXTRA FEATURES

LN	OB/XF CODE	DESCRIPTION	BLD	CAP	L	W	UNITS	UT	Adj R	ADJ UNIT PRICE	ORIG COND	YEAR ON	YEAR ACTUAL	Q	% COND	OB/XF MKT VALUE	NOTES
23	0463	FENCE GATE	0	0	0	0	2.00	UT	300.00	300.00	100	2008	2008	3	72	432	
24	0410	ELEVATOR	0	0	0	0	1.00	UT	15,000.00	15,000.00	100	2008	2008	3	100	15,000	

LAND DESCRIPTION

TOTAL OB/XF 15,432

LN	USE CODE	CLS	LAND USE DESCRIPTION	CAP	RD	LOC ZONE	FRONT	DEPTH	TOT LND UTS	UNIT TYPE	DT	DPTH FACT	% COND	TOT ADJ	UNIT PRICE	ADJ UNIT PRICE	LAND VALUE	OTHER ADJUSTMENTS AND NOTES	YEAR	DENSITY	DECL	FRZ	YR	CONSRV

REVIEW DATE 05/21/2025 BY KWA Total Acres: 2.78 Total Land Value: 614,899 Market: 0 Agricultural: 0 Common: 0 PRINTED 07/30/2025 BY SYS