LOT 9
IN OR 2473/289
PIRATES WOOD 4 UNR

DOWNS STEVEN G & JODI E
97562 PIRATES POINT RD
YULEE, FL 32097

2025

43-3N-28-509D-0009-0000

BUILDING CHARACTERISTICS

ELEMENT	CD	CONSTRUCTION
Exterior Wall	10	ABOVE AVG 100
Roof Structur	08	IRREGULAR 100
Roof Cover	12	MODULAR MT 100
Interior Wall	05	DRYWALL 100
Interior Floo	12	HARDWOOD 70
Interior Floo	14	CARPET 30
Air Condition	03	CENTRAL 100
Heating Type	04	AIR DUCTED 100
Bedrooms		3 100
Bathrooms		2 100
Frame	02	WOOD FRAME 100
Stories	2.	2. 100
Units		0 100
BUD8 Adjustme	04	DIST 01 100
Quality	03	Quality Level 03
DOR CODE	0100	SINGLE FAMILY
MAP NUM		MKT AREA 04
NEIGHBORHOOD/LOC	4032.00	

AREA TYPE	TOTAL GROSS AREA	PCT OF BASE	YEAR	TOT ADJ AREA	SUBAREA MARKET VALUE
BAS	1,120	100	1993	1,120	162,787
BAS	530	100	2019	530	77,033
FGR	528	55	2024	290	42,150
FOP	280	30	1993	84	12,209
FOP	480	30	2019	144	20,930
FST	120	55	2024	66	9,593
FUS	898	100	1993	898	130,520
FUS	578	100	2024	578	84,009
STR	40	10	2019	4	582
STR	68	10	2024	7	1,018
TOTALS	4,682			3,739	543,446

MARKET ADJUSTMENTS

TYPE	MDL	EFF. AREA	TOT ADJ PTS	EFF. BASE RATE	REPL. COST NEW	AYB	EYB	ECON	FNCT		NORM	% COND
0500	01	3,739	99.4500	157.13	587,509	1984	2008	0	0	0	7.50	92.50

1 SFR CUST – 100% - 2022 Heated Area: 3126 HX Base Yr

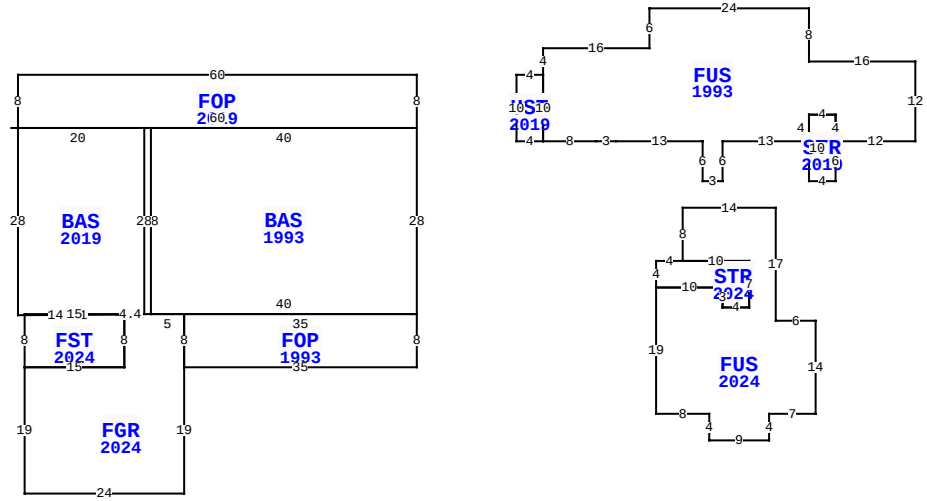

** This building has 11 Sub-Areas

97562 PIRATES POINT RD, YULEE

BLD DATE		LGL DATE	
XF DATE		LAND DATE	04/08/2025 MLU
INC DATE		AG DATE	

NASSAU COUNTY PROPERTY

PAGE 1 of 1 4

VALUATION SUMMARY

VALUATION BY		STANDARD
Tax Group: 4	Tax Dist:	
BUILDING MARKET VALUE		543,446
TOTAL MARKET OB/XF VALUE		75,925
TOTAL LAND VALUE - MARKET		200,000
TOTAL MARKET VALUE		819,371
SOH/AGL Deduction		2,030
ASSESSED VALUE		817,341
TOTAL EXEMPTION VALUE	13	817,341
BASE TAXABLE VALUE		0
TOTAL JUST VALUE		819,371
NCON VALUE		0
INCOME VALUE		
PREVIOUS YEAR MKT VALUE		794,306

PERMIT NUM	DESCRIPTION	AMT	ISSUED
22017716	GARAGE	137,875	12/01/2022
M1801167	H/AC	0	02/01/2018
B1705157	NEW CONSTR	0	06/09/2017

SALES DATA

OFF RECORD Number	DATE	TYPE INST	Q U	V I	RSN CD	SALE PRICE
2473/0289	6/18/2021	WD	Q	I	01	650,000
GRANTOR: GILBERT BUDDY A & SAR						
GRANTEE: DOWNS STEVEN G & JO						
2282/1421	6/14/2019	WD	Q	I	01	510,000
GRANTOR: WILSON ADAM & HILARY						
GRANTEE: GILBERT BUDDY A & S						

BUILDING NOTES

EXTRA FEATURES

L N	OB/XF CODE	DESCRIPTION	BLD	CAP	L	W	UNITS	UT	Adj R	ADJ UNIT PRICE	ORIG COND	YEAR ON	YEAR ACTUAL	Q	% COND	OB/XF MKT VALUE	NOTES
1	0504	FP-ELECTRI	0	100	0	0	1.00	UT	2,000.00	2,000.00	100	2019	2019	3	98	1,960	
2	0300	BOAT DCK W	0	100	0	0	1,155.00	SF	40.00	40.00	100	2019	2019	3	87	40,194	
3	0855	CONC PAVER	0	100	0	0	2,300.00	SF	10.00	10.00	100	2024	2023		100	23,000	
4	0350	CARPORT WD	0	100	24	12	288.00	SF	13.00	13.00	100	2024	2022		93	3,482	
5	0310	AL GANG WY	0	100	0	0	20.00	LF	115.00	115.00	100	2024	2021		90	2,070	
6	0303	FLT DOCK W	0	100	20	8	160.00	SF	26.00	26.00	100	2024	2021		93	3,869	
7	0322	BOAT LFT L	0	100	0	0	1.00	UT	1,500.00	1,500.00	100	2024	2021		90	1,350	

BUILDING DIMENSIONS

BAS=[YR=1993;ORIG=0,36] N28 W40 S28 E40 $
FUS=[YR=1993;ORIG=19,0] N4 E16 N6 E24 S8 E16 S12 W12 N4 W4 S4 W13 S6 W3 N6 W13 W3 W8 N10 $
FUS=[YR=2024;ORIG=40,20] E14 S17 E6 S14 W7 S4 W9 N4 W8 N19 E10 S3 E4 N7 W10 N8 $
BAS=[YR=2019;ORIG=-60,8] S28 S0.2 U0.1R14.11 U0.1R4.1 N28 W20 $
FGR=[YR=2024;ORIG=-35,36] W5 W4 S8 W15 S19 E24 N19 N8 $
FOP=[YR=2019;ORIG=0,0] W60 S8 E60 N8 $
FOP=[YR=1993;ORIG=-35,36] S8 E35 N8 W35 $
FST=[YR=2024;ORIG=-59,36] E15 S8 W15 N8 $
STR=[YR=2024;ORIG=36,28] E4 E10 S7 W4 N3 W10 N4 $

LAND DESCRIPTION

TOTAL OB/XF 75,925

L N	USE CODE	CLS	LAND USE DESCRIPTION	CAP	R D	LOC ZONE	FRONT	DEPTH	TOT LND UTS	UNIT TYPE	D T	DPTH FACT	% COND	TOT ADJ	UNIT PRICE	ADJ UNIT PRICE	LAND VALUE	OTHER ADJUSTMENTS AND NOTES	YEAR	DENSITY	DECL	FRZ	YR	CONSRV
1	000131	C	RES CREEK	100		RSF-1	0.00	0.00	1.00	LT		1.00	1.00	1.00	200,000.00	200,000.00	200,000							

REVIEW DATE 01/05/2024 BY DJ Total Acres: 0.00 Total Land Value: 200,000 Market: 0 Agricultural: 0 Common: 200,000 PRINTED 07/30/2025 BY SYS