LOT 31
IN OR 1595/290
PIRATES WOOD 2 UNR

RIEHLE AMY
97144 MORGANS WAY
YULEE, FL 32097

2025

43-3N-28-509B-0031-0000

BUILDING CHARACTERISTICS

ELEMENT	CD	CONSTRUCTION
Exterior Wall	20	FACE BRICK 90
Exterior Wall	05	AVERAGE 10
Roof Structur	03	GABLE/HIP 100
Roof Cover	03	COMP SHNGL 100
Interior Wall	05	DRYWALL 100
Interior Floo	14	CARPET 70
Interior Floo	08	SHT VINYL 30
Air Condition	03	CENTRAL 100
Heating Type	04	AIR DUCTED 100
Bedrooms		4 100
Bathrooms		2 100
Frame	02	WOOD FRAME 100
Stories	1.	1. 100
Units		0 100
Occupancy	00	NONE 100
Quality	02	Quality Level 02
DOR CODE	0100	SINGLE FAMILY
MAP NUM		MKT AREA 04
NEIGHBORHOOD/LOC	4032.00	

AREA TYPE	TOTAL GROSS AREA	PCT OF BASE	YEAR	TOT ADJ AREA	SUBAREA MARKET VALUE
BAS	2,390	100	2000	2,390	251,271
FGR	420	55	2000	231	24,286
FOP	32	30	2000	10	1,052
FOP	216	30	2000	65	6,834
TOTALS	3,058			2,696	283,441

MARKET ADJUSTMENTS

TYPE	MDL	EFF. AREA	TOT ADJ PTS	EFF. BASE RATE	REPL. COST NEW	AYB	EYB	ECON	FNCT		NORM	% COND
0900	01	2,696	96.3984	127.25	343,066	2000	2000	0	0	0	17.38	82.62

1 SNGL FAM – 100% - 2009 Heated Area: 2390 HX Base Yr 2009

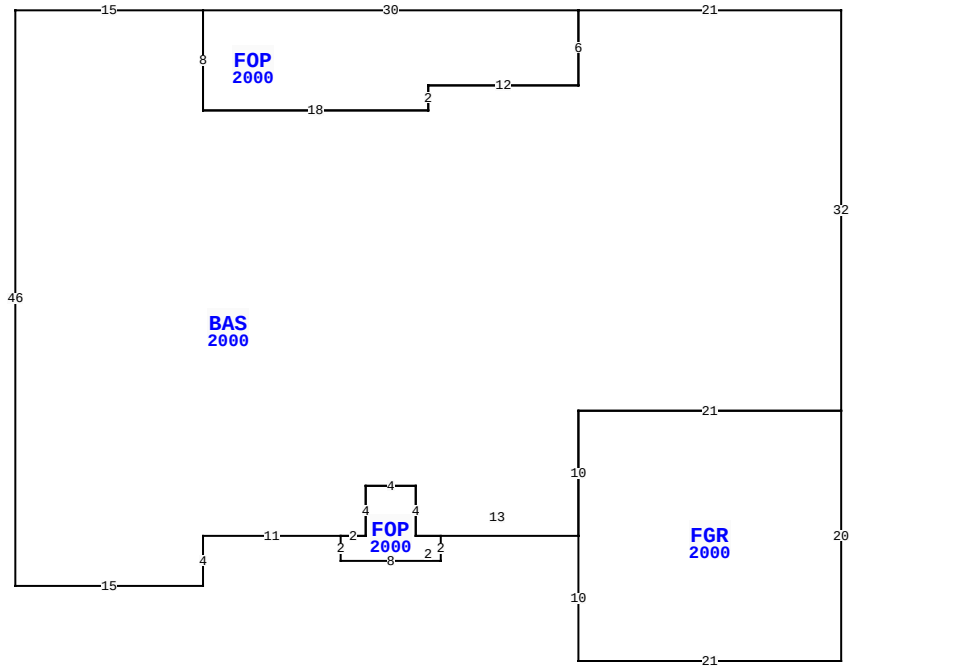

97144 MORGANS WAY, YULEE

BLD DATE		LGL DATE	
XF DATE		LAND DATE	06/16/2023 MLU
INC DATE		AG DATE	

NASSAU COUNTY PROPERTY

PAGE 1 of 1 4

VALUATION SUMMARY

VALUATION BY		STANDARD
Tax Group: 4	Tax Dist:	
BUILDING MARKET VALUE		283,441
TOTAL MARKET OB/XF VALUE		10,526
TOTAL LAND VALUE - MARKET		100,000
TOTAL MARKET VALUE		393,967
SOH/AGL Deduction		209,241
ASSESSED VALUE		184,726
TOTAL EXEMPTION VALUE	HX HB	50,722
BASE TAXABLE VALUE		134,004
TOTAL JUST VALUE		393,967
NCON VALUE		0
INCOME VALUE		
PREVIOUS YEAR MKT VALUE		367,502

PERMIT NUM	DESCRIPTION	AMT	ISSUED
M17522	H/AC	0	08/01/2012
996286	NEW CONSTR	108,000	10/01/1999

SALES DATA

OFF RECORD Number	DATE	TYPE INST	Q U	V I	RSN CD	SALE PRICE
1595/0290	12/02/2008	WD	Q	I	05	218,000
GRANTOR: US BANK NATIONAL ASSO						
GRANTEE: RIEHLE AMY						
1579/1375	8/01/2008	CT	Q	I	05	100
GRANTOR: CLERK OF COURT						
GRANTEE: US BANK NATIONAL AS						

BUILDING NOTES

BUILDING DIMENSIONS

BAS=[YR=2000] W21 FOP=[YR=2000] W30 S8 E18 N2 E12 N6 $ S6 W12 S2 W18 N8 W15 S46 E15 N4 E11 FOP=[YR=2000] S2 E8 N2 W2 N4 W4 S4 W2 $ E2 N4 E4 S4 E13 FGR=[YR=2000] S10 E21 N20 W21 S10 $ N10 E21 N32 $.

EXTRA FEATURES

LN	OB/XF CODE	DESCRIPTION	BLD	CAP	L	W	UNITS	UT	Adj R	ADJ UNIT PRICE	ORIG COND	YEAR ON	YEAR ACTUAL	Q	% COND	OB/XF MKT VALUE	NOTES
1	0500	FP-PRE FAB	0	100	0	0	1.00	UT	3,500.00	3,500.00	100	2000	2000	3	83	2,905	
2	0810	CONCRETE A	0	100	51	3	153.00	SF	6.50	6.50	100	2000	2000	3	77	766	
3	0811	CONCRETE B	0	100	0	0	727.00	SF	5.20	5.20	100	2000	2000	3	77	2,911	
4	0803	ASPHALT C	0	100	0	0	1,424.00	SF	2.00	2.00	100	2001	2001	3	50	1,424	
5	0911	SCRN RM A	0	100	12	30	360.00	SF	17.50	17.50	100	2010	2010	3	40	2,520	

LAND DESCRIPTION

TOTAL OB/XF 10,526

LN	USE CODE	CLS	LAND USE DESCRIPTION	CAP	RD	LOC ZONE	FRONT	DEPTH	TOT LND UTS	UNIT TYPE	DT	DPTH FACT	% COND	TOT ADJ	UNIT PRICE	ADJ UNIT PRICE	LAND VALUE	OTHER ADJUSTMENTS AND NOTES	YEAR	DENSITY	DECL	FRZ	YR	CONSRV
1	000100	C	RES	100		RSF-1	0.00	0.00	1.00	LT		1.00	1.00	1.00	100,000.00	100,000.00	100,000							

REVIEW DATE 05/12/2019 BY KBA Total Acres: 0.00 Total Land Value: 100,000 Market: 0 Agricultural: 0 Common: 100,000 PRINTED 07/30/2025 BY SYS