LOT 25
IN OR 1278/440
PIRATES WOOD 2 UNR

REYNARD KELLY J GRIFFIN
97028 MORGANS WAY
YULEE, FL 32097-2404

2025

43-3N-28-509B-0025-0000

NASSAU COUNTY PROPERTY

BUILDING CHARACTERISTICS

ELEMENT	CD	CONSTRUCTION
Exterior Wall	20	FACE BRICK 100
Roof Structur	03	GABLE/HIP 100
Roof Cover	03	COMP SHNGL 100
Interior Wall	05	DRYWALL 100
Interior Floo	14	CARPET 80
Interior Floo	11	CLAY TILE 20
Air Condition	03	CENTRAL 100
Heating Type	04	AIR DUCTED 100
Bedrooms		4 100
Bathrooms		2 100
Frame	02	WOOD FRAME 100
Stories	1.	1. 100
Units		0 100
Occupancy	00	NONE 100
Quality	01	Quality Level 01

DOR CODE 0100 SINGLE FAMILY
MAP NUM | MKT AREA 04
NEIGHBORHOOD/LOC 4032.00

AREA TYPE	TOTAL GROSS AREA	PCT OF BASE	YEAR	TOT ADJ AREA	SUBAREA MARKET VALUE
BAS	2,245	100	2003	2,245	282,993
FGR	441	55	2003	243	30,632
FOP	44	30	2003	13	1,639
FSP	308	40	2003	123	15,505
TOTALS	3,038			2,624	330,768

MARKET ADJUSTMENTS

TYPE	MDL	EFF. AREA	TOT ADJ PTS	EFF. BASE RATE	REPL. COST NEW	AYB	EYB	ECON	FNCT		NORM	% COND
0500	01	2,624	94.6944	149.62	392,603	2003	2003	0	0	0	15.75	84.25

1 SFR CUST – 100% - 2004 Heated Area: 2245 HX Base Yr 2004

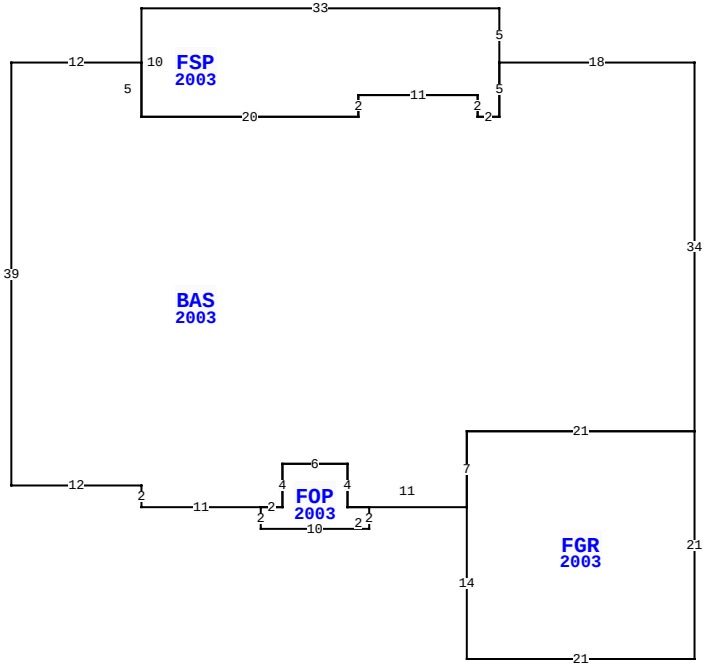

97028 MORGANS WAY, YULEE

BLD DATE	03/03/2023 NW	LGL DATE	
XF DATE		LAND DATE	06/16/2023 MLU
INC DATE		AG DATE	

NASSAU COUNTY PROPERTY — VALUATION SUMMARY

VALUATION BY		STANDARD
Tax Group: 4	Tax Dist:	
BUILDING MARKET VALUE		330,768
TOTAL MARKET OB/XF VALUE		8,081
TOTAL LAND VALUE - MARKET		100,000
TOTAL MARKET VALUE		438,849
SOH/AGL Deduction		246,457
ASSESSED VALUE		192,392
TOTAL EXEMPTION VALUE	HX HB	50,722
BASE TAXABLE VALUE		141,670
TOTAL JUST VALUE		438,849
NCON VALUE		0
INCOME VALUE		
PREVIOUS YEAR MKT VALUE		386,845

PERMIT NUM	DESCRIPTION	AMT	ISSUED
B0311558	NEW CONSTR	159,301	08/01/2003

SALES DATA

OFF RECORD Number	DATE	TYPE INST	Q U	V I	RSN CD	SALE PRICE
1278/0440	12/03/2004	QC	Q	I	01	100
GRANTOR: GRIFFIN TIMOTHY M						
GRANTEE: GRIFFIN KELLY J						
1042/0362	3/07/2002	WD	Q	V		22,000
GRANTOR: TERRY ROBERT & JUDIE						
GRANTEE: GRIFFIN TIMOTHY M &						

BUILDING NOTES

BUILDING DIMENSIONS

BAS=[YR=2003] W18 FSP=[YR=2003] N5 W33 S10 E20 N2 E11 S2 E2 N5$ S5 W2 N2 W11 S2 W20 N5 W12 S39 E12 S2 E11 FOP=[YR=2003] S2 E10 N2 W2 N4 W6 S4 W2$ E2 N4 E6 S4 E11 FGR=[YR=2003] S14 E21 N21 W21 S7$ N7 E21 N34$.

EXTRA FEATURES

LN	OB/XF CODE	DESCRIPTION	BLD	CAP	L	W	UNITS	UT	Adj R	ADJ UNIT PRICE	ORIG COND	YEAR ON	YEAR ACTUAL	Q	% COND	OB/XF MKT VALUE	NOTES
1	0500	FP-PRE FAB	0	100	0	0	1.00	UT	3,500.00	3,500.00	100	2003	2003	3	86	3,010	
2	0812	CONCRETE C	0	100	0	0	1,546.00	SF	4.00	4.00	100	2003	2003	3	82	5,071	

LAND DESCRIPTION

TOTAL OB/XF 8,081

LN	USE CODE	CLS	LAND USE DESCRIPTION	CAP	RD	LOC ZONE	FRONT	DEPTH	TOT LND UTS	UNIT TYPE	DT	DPTH FACT	% COND	TOT ADJ	UNIT PRICE	ADJ UNIT PRICE	LAND VALUE	OTHER ADJUSTMENTS AND NOTES	YEAR	DENSITY	DECL	FRZ	YR	CONSRV
1	000100	C	RES	100		RSF-1	0.00	0.00	1.00	LT		1.00	1.00	1.00	100,000.00	100,000.00	100,000							

REVIEW DATE 05/12/2019 BY KBA Total Acres: 0.00 Total Land Value: 100,000 Market: 0 Agricultural: 0 Common: 100,000 PRINTED 07/30/2025 BY SYS