LOT 14
IN OR 2005/1748
PIRATES WOOD 2 UNR

HADDOCK JOHN G & CYNTHIA L
97034 TREASURE TRAIL
YULEE, FL 32097

2025

43-3N-28-509B-0014-0000

NASSAU COUNTY PROPERTY

BUILDING CHARACTERISTICS

ELEMENT	CD	CONSTRUCTION
Exterior Wall	12	CEDAR 80
Exterior Wall	15	CONC BLOCK 20
Roof Structur	08	IRREGULAR 100
Roof Cover	12	MODULAR MT 100
Interior Wall	05	DRYWALL 100
Interior Floo	11	CLAY TILE 100
Air Condition	03	CENTRAL 100
Heating Type	04	AIR DUCTED 100
Bedrooms		3 100
Bathrooms		2 100
Frame	02	WOOD FRAME 100
Stories	3.	3. 100
Units		0 100
BUD8 Adjustme	04	DIST 01 100
Occupancy	00	NONE 100
Quality	02	Quality Level 02
DOR CODE	0100	SINGLE FAMILY
MAP NUM		MKT AREA 04
NEIGHBORHOOD/LOC	4032.00	

AREA TYPE	TOTAL GROSS AREA	PCT OF BASE	YEAR	TOT ADJ AREA	SUBAREA MARKET VALUE
BAS	448	100	1993	448	57,899
BAS	640	100	1993	640	82,713
BAS	360	100	2016	360	46,526
BAS	424	100	2016	424	54,797
BAS	60	100	2024	60	7,754
BAS	96	100	2024	96	12,407
FOP	16	30	1993	5	646
FOP	36	30	1993	11	1,422
FSP	240	40	2016	96	12,407
FUS	256	100	1993	256	33,085
TOTALS	3,098			2,492	322,063

MARKET ADJUSTMENTS

TYPE	MDL	EFF. AREA	TOT ADJ PTS	EFF. BASE RATE	REPL. COST NEW	AYB	EYB	ECON	FNCT		NORM	% COND
0900	01	2,492	112.5408	148.55	370,187	1988	1998	0	0	0	13.00	87.00

1 SNGL FAM – 100% - 2008 Heated Area: 2284 HX Base Yr 2008

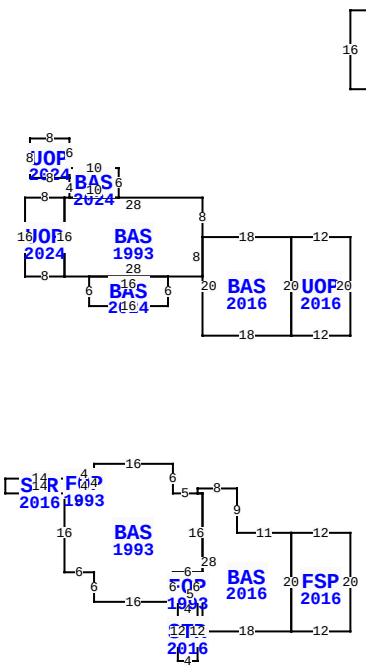

** This building has 15 Sub-Areas

97034 TREASURE TRL, YULEE

BLD DATE		LGL DATE	
XF DATE		LAND DATE	06/16/2023 MLU
INC DATE		AG DATE	

VALUATION SUMMARY

VALUATION BY		STANDARD
Tax Group: 4	Tax Dist:	
BUILDING MARKET VALUE		322,063
TOTAL MARKET OB/XF VALUE		7,048
TOTAL LAND VALUE - MARKET		100,000
TOTAL MARKET VALUE		429,111
SOH/AGL Deduction		189,413
ASSESSED VALUE		239,698
TOTAL EXEMPTION VALUE	HX HB	50,722
BASE TAXABLE VALUE		188,976
TOTAL JUST VALUE		429,111
NCON VALUE		0
INCOME VALUE		
PREVIOUS YEAR MKT VALUE		404,557

PERMIT NUM	DESCRIPTION	AMT	ISSUED
B1807550	CONVERT PL SHED	14,340	07/25/2018
R1703737	REPAIR/RRF	3,000	06/01/2017
B1531280	ADDITION	93,875	10/01/2015
7656	XFOB	2,400	11/04/1991
2743	NEW CONSTR	0	10/02/1987
4275	NEW CONSTR	36,616	07/28/1987

SALES DATA

OFF RECORD Number	DATE	TYPE INST	Q / U	V / I	RSN CD	SALE PRICE
2005/1748	9/21/2015	WD	U	I	30	75,300
GRANTOR: HADDOCK JOHN GREGORY						
GRANTEE: HADDOCK JOHN G & CY						
1493/1411	4/19/2007	WD	Q	I		185,000
GRANTOR: KJELBERG CHRISTINE						
GRANTEE: HADDOCK JOHN GREGOR						

BUILDING NOTES

EXTRA FEATURES

LN	OB/XF CODE	DESCRIPTION	BLD	CAP	L	W	UNITS	UT	Adj R	ADJ UNIT PRICE	ORIG COND	YEAR ON	YEAR ACTUAL	Q	% COND	OB/XF MKT VALUE	NOTES
1	0510	GARAGE WD-	0	100	30	20	600.00	SF	35.00	35.00	100	2000	2000	3	27	5,670	
2	0810	CONCRETE A	0	100	0	0	372.00	SF	6.50	6.50	100	1990	1990	3	57	1,378	

BUILDING DIMENSIONS

BAS=[YR=1993;ORIG=-31,52] W5 N6 W16 S2 S4 W6 S16 E6 S6 E16 N6 E6 N16 W1 $
BAS=[YR=1993;ORIG=-30,0] N8 W28 S16 E28 N8 $
BAS=[YR=2016;ORIG=-12,60] W11 N9 W8 S1 E1 S28 E18 N20 $
BAS=[YR=2016;ORIG=-12,0] W18 S20 E18 N20 $
FUS=[YR=1993;ORIG=0,-30] N16 E16 S16 W16 $
UOP=[YR=2016;ORIG=0,0] W12 S20 E12 N20 $
FSP=[YR=2016;ORIG=0,60] W12 S20 E12 N20 $
UOP=[YR=2024;ORIG=-58,-8] W8 S16 E8 N16 $
BAS=[YR=2024;ORIG=-53,8] E16 S6 W16 N6 $
UOP=[YR=2024;ORIG=-57,-12] W8 N8 E8 S6 S2 $
BAS=[YR=2024;ORIG=-57,-8] E10 N6 W10 S2 S4 $

LAND DESCRIPTION

TOTAL OB/XF 7,048

LN	USE CODE	CLS	LAND USE DESCRIPTION	CAP	RD	LOC ZONE	FRONT	DEPTH	TOT LND UTS	UNIT TYPE	DT	DPTH FACT	% COND	TOT ADJ	UNIT PRICE	ADJ UNIT PRICE	LAND VALUE	OTHER ADJUSTMENTS AND NOTES	YEAR	DENSITY	DECL	FRZ	YR	CONSRV
1	000100	C	RES	100	0006	RSF-1	0.00	0.00	1.00	LT		1.00	1.00	1.00	100,000.00	100,000.00	100,000							

REVIEW DATE 05/12/2019 BY KBA Total Acres: 0.00 Total Land Value: 100,000 Market: 0 Agricultural: 0 Common: 100,000 PRINTED 07/30/2025 BY SYS