LOTS 4 & 5
IN OR 1875/193
PIRATES WOOD 2 UNR

BEATIE DAVID G & BARBARA J
97235 MORGANS WAY
YULEE, FL 32097

2025

43-3N-28-509B-0004-0000

BUILDING CHARACTERISTICS

ELEMENT	CD	CONSTRUCTION
Exterior Wall	30	VINYL 100
Roof Structur	08	IRREGULAR 100
Roof Cover	03	COMP SHNGL 100
Interior Wall	05	DRYWALL 100
Interior Floo	14	CARPET 60
Interior Floo	11	CLAY TILE 40
Air Condition	03	CENTRAL 100
Heating Type	04	AIR DUCTED 100
Bedrooms		4 100
Bathrooms		3 100
Frame	02	WOOD FRAME 100
Stories	1.	1. 100
Units		0 100
Occupancy	00	NONE 100
Quality	03	Quality Level 03
DOR CODE	0100	SINGLE FAMILY
MAP NUM		MKT AREA 04
NEIGHBORHOOD/LOC	4032.00	

AREA TYPE	TOTAL GROSS AREA	PCT OF BASE	YEAR	TOT ADJ AREA	SUBAREA MARKET VALUE
BAS	480	100	2016	480	68,729
BAS	3,134	100	2016	3,134	448,747
FDG	240	60	2016	144	20,619
FGR	656	55	2016	361	51,690
FOP	200	30	2016	60	8,591
FOP	225	30	2016	68	9,737
FUS	680	100	2016	680	97,367
STR	40	10	2016	4	573
TOTALS	5,655			4,931	706,054

MARKET ADJUSTMENTS

TYPE	MDL	EFF. AREA	TOT ADJ PTS	EFF. BASE RATE	REPL. COST NEW	AYB	EYB	ECON	FNCT		NORM	% COND
0500	01	4,931	93.9120	148.38	731,662	2016	2016	0	0	0	3.50	96.50

1 SFR CUST – 100% - 2021 Heated Area: 4294 HX Base Yr 2021

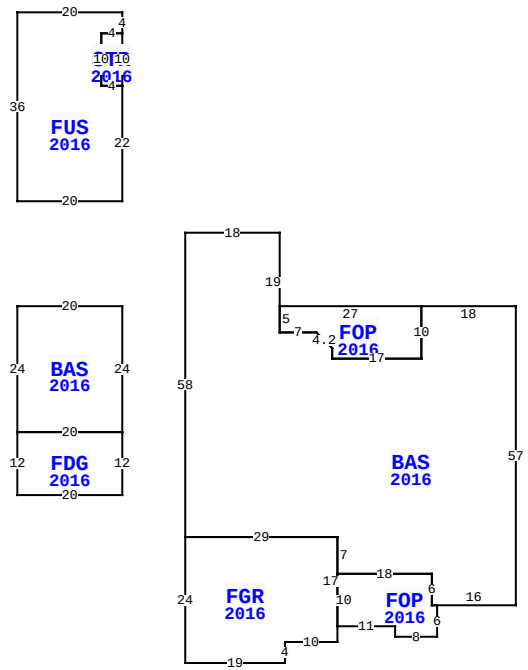

97235 MORGANS WAY, YULEE

BLD DATE		LGL DATE	
XF DATE		LAND DATE	06/16/2023 MLU
INC DATE		AG DATE	

NASSAU COUNTY PROPERTY

PAGE 1 of 2 4

VALUATION SUMMARY

VALUATION BY		STANDARD
Tax Group: 4	Tax Dist:	
BUILDING MARKET VALUE		721,779
TOTAL MARKET OB/XF VALUE		34,407
TOTAL LAND VALUE - MARKET		170,000
TOTAL MARKET VALUE		926,186
SOH/AGL Deduction		367,385
ASSESSED VALUE		558,801
TOTAL EXEMPTION VALUE	HX HB	50,722
BASE TAXABLE VALUE		508,079
TOTAL JUST VALUE		926,186
NCON VALUE		0
INCOME VALUE		
PREVIOUS YEAR MKT VALUE		837,441

PERMIT NUM	DESCRIPTION	AMT	ISSUED
B2005675	GARAGE	33,810	08/01/2020
B1530433	CO ISSUED	0	03/17/2016
B1530748	NEW CONSTR	144,886	07/01/2015
B1530433	NEW CONSTR	387,542	05/01/2015

SALES DATA

OFF RECORD Number	DATE	TYPE INST	Q U	V I	RSN CD	SALE PRICE
1875/0193	8/16/2013	WD	U	V	37	72,000
GRANTOR: WATSON DAVID J & ANGE						
GRANTEE: BEATIE DAVID G & BA						
1189/0893	11/18/2003	WD	Q	V		58,000
GRANTOR: GRIFFIN MATTHEW						
GRANTEE: WATSON DAVID J & AN						

BUILDING NOTES

BUILDING DIMENSIONS

BAS=[YR=2016] W18 FOP=[YR=2016] W27 S5 E7 D3 R3 S2 E17 N10$ S10 W17 N2 U3 L3 W7 N19 W18 S58 FGR=[YR=2016] S24 E19 N4 E10 N3 FOP=[YR=2016] E11 S2 E8 N6 W1 N6 W18 S10$ N17 W29$ E29 S7 E18 S6 E16 N57$ PTR= W75 BAS=[YR=2016] W20 S24 FDG=[YR=2016] S12 E20 N12 W20$ E20 N24$ PTR= N20 FUS=[YR=2016] N22 STR=[YR=2016] N10 W4 S10 E4$ W4 N10 E4 N4 W20 S36 E20$ S20$ E75$.

EXTRA FEATURES

LN	OB/XF CODE	DESCRIPTION	BLD	CAP	L	W	UNITS	UT	Adj R	ADJ UNIT PRICE	ORIG COND	YEAR ON	YEAR ACTUAL	Q	% COND	OB/XF MKT VALUE	NOTES
1	0855	CONC PAVER	0	100	22	12	264.00	SF	10.00	10.00	100	2016	2016	3	95	2,508	
2	0855	CONC PAVER	0	100	44	18	792.00	SF	10.00	10.00	100	2016	2016	3	95	7,524	
3	0812	CONCRETE C	0	100	0	0	4,561.00	SF	4.00	4.00	100	2016	2016	3	95	17,332	
4	0476	VF 6 SBPL	0	100	0	0	130.00	LF	41.60	41.60	100	2016	2016	3	89	4,813	
5	0810	CONCRETE A	0	100	0	0	350.00	SF	6.50	6.50	100	2020	2020	3	98	2,230	

LAND DESCRIPTION

TOTAL OB/XF 34,407

LN	USE CODE	CLS	LAND USE DESCRIPTION	CAP	RD	LOC ZONE	FRONT	DEPTH	TOT LND UTS	UNIT TYPE	DT	DPTH FACT	% COND	TOT ADJ	UNIT PRICE	ADJ UNIT PRICE	LAND VALUE	OTHER ADJUSTMENTS AND NOTES	YEAR	DENSITY	DECL	FRZ	YR	CONSRV
1	000100	C	RES	100		RSF-1	0.00	0.00	2.00	LT		1.00	1.00	0.85	100,000.00	85,000.00	170,000							

REVIEW DATE 06/18/2021 BY KW Total Acres: 0.00 Total Land Value: 170,000 Market: 0 Agricultural: 0 Common: 170,000 PRINTED 07/30/2025 BY SYS

LOTS 4 & 5
IN OR 1875/193
PIRATES WOOD 2 UNR

BEATIE DAVID G & BARBARA J
97235 MORGANS WAY
YULEE, FL 32097

2025

43-3N-28-509B-0004-0000

NASSAU COUNTY PROPERTY

BUILDING CHARACTERISTICS

ELEMENT	CD	CONSTRUCTION
Exterior Wall	25	MOD METAL 100
Roof Structur	10	STEEL FRME 100
Roof Cover	12	MODULAR MT 100
Interior Wall	07	NONE 100
Interior Floo	03	CONC FINSH 100
Air Condition	01	NONE 100
Heating Type	01	NONE 100
Bedrooms		0 100
Bathrooms		0 100
Frame	05	STEEL 100
Stories	1.	1. 100
Units		0 100
Occupancy	00	NONE 100
Quality	06	Quality Level 06

DOR CODE 0100 SINGLE FAMILY
MAP NUM | MKT AREA 04
NEIGHBORHOOD/LOC 4032.00

AREA TYPE	TOTAL GROSS AREA	PCT OF BASE	YEAR	TOT ADJ AREA	SUBAREA MARKET VALUE
BAS	700	100	2020	700	15,725
TOTALS	700			700	15,725

MARKET ADJUSTMENTS

TYPE	MDL	EFF. AREA	TOT ADJ PTS	EFF. BASE RATE	REPL. COST NEW	AYB	EYB	ECON	FNCT		NORM	% COND
6500	01	700	63.2500	23.40	16,380	2020	2020	0	0	0	4.00	96.00

2 GARAGE RES – 100% - 2021 Heated Area: 700 HX Base Yr 2021

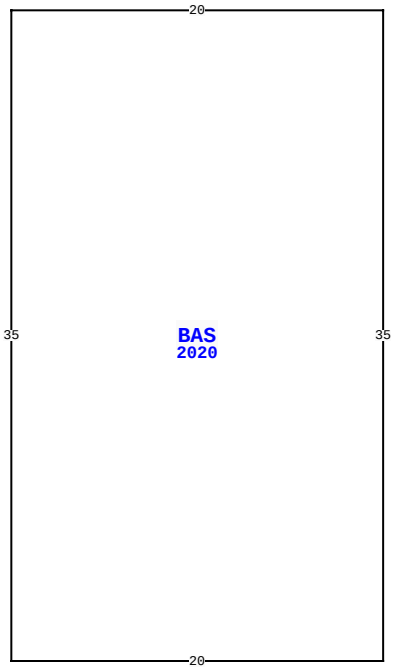

97235 MORGANS WAY, YULEE

BLD DATE		LGL DATE	
XF DATE		LAND DATE	06/16/2023 MLU
INC DATE		AG DATE	

VALUATION SUMMARY

VALUATION BY		STANDARD
Tax Group: 4	Tax Dist:	
BUILDING MARKET VALUE		721,779
TOTAL MARKET OB/XF VALUE		34,407
TOTAL LAND VALUE - MARKET		170,000
TOTAL MARKET VALUE		926,186
SOH/AGL Deduction		367,385
ASSESSED VALUE		558,801
TOTAL EXEMPTION VALUE	HX HB	50,722
BASE TAXABLE VALUE		508,079
TOTAL JUST VALUE		926,186
NCON VALUE		0
INCOME VALUE		
PREVIOUS YEAR MKT VALUE		837,441

PERMIT NUM	DESCRIPTION	AMT	ISSUED

SALES DATA

OFF RECORD Number	DATE	TYPE INST	Q / U	V / I	RSN CD	SALE PRICE
1875/0193	8/16/2013	WD	U	V	37	72,000
GRANTOR: WATSON DAVID J & ANGE						
GRANTEE: BEATIE DAVID G & BA						
1189/0893	11/18/2003	WD	Q	V		58,000
GRANTOR: GRIFFIN MATTHEW						
GRANTEE: WATSON DAVID J & AN						

BUILDING NOTES

BUILDING DIMENSIONS

BAS=[YR=2020] W20 S35 E20 N35$.

EXTRA FEATURES

LN	OB/XF CODE	DESCRIPTION	BLD	CAP	L	W	UNITS	UT	Adj R	ADJ UNIT PRICE	ORIG COND	YEAR ON	YEAR ACTUAL	Q	% COND	OB/XF MKT VALUE	NOTES

LAND DESCRIPTION

TOTAL OB/XF 0

LN	USE CODE	CLS	LAND USE DESCRIPTION	CAP	RD	LOC ZONE	FRONT	DEPTH	TOT LND UTS	UNIT TYPE	DT	DPTH FACT	% COND	TOT ADJ	UNIT PRICE	ADJ UNIT PRICE	LAND VALUE	OTHER ADJUSTMENTS AND NOTES	YEAR	DENSITY	DECL	FRZ	YR	CONSRV

REVIEW DATE 06/18/2021 BY KW Total Acres: 0.00 Total Land Value: 170,000 Market: 0 Agricultural: 0 Common: 170,000 PRINTED 07/30/2025 BY SYS