LOT 10 OR 170/273
PIRATES WOOD #1 UNR

ROBERTS KEVIN J & ANH N
97177 BLACKBEARDS WAY
YULEE, FL 32097

2025

43-3N-28-509A-0010-0000

NASSAU COUNTY PROPERTY

BUILDING CHARACTERISTICS

ELEMENT	CD	CONSTRUCTION
Exterior Wall	12	CEDAR 80
Exterior Wall	20	FACE BRICK 20
Roof Structur	08	IRREGULAR 100
Roof Cover	12	MODULAR MT 100
Interior Wall	04	PLYWOOD 50
Interior Wall	05	DRYWALL 50
Interior Floo	12	HARDWOOD 80
Interior Floo	11	CLAY TILE 20
Air Condition	03	CENTRAL 100
Heating Type	04	AIR DUCTED 100
Bedrooms		4 100
Bathrooms		3 100
Frame	02	WOOD FRAME 100
Stories	2.	2. 100
Units		0 100
BUD8 Adjustme	04	DIST 01 100
Occupancy	00	NONE 100
Quality	04	Quality Level 04
DOR CODE	0100	SINGLE FAMILY
MAP NUM		MKT AREA 04
NEIGHBORHOOD/LOC	4032.00	

AREA TYPE	TOTAL GROSS AREA	PCT OF BASE	YEAR	TOT ADJ AREA	SUBAREA MARKET VALUE
BAS	828	100	1993	828	105,189
BAS	212	100	2022	212	26,932
DCK	284	10	2022	28	3,557
FGR	724	55	1993	398	50,562
FOP	86	30	2022	26	3,303
FOP	192	30	2022	58	7,368
FOP	200	30	2022	60	7,623
FOP	388	30	2022	116	14,737
FST	432	55	1993	238	30,236
FST	296	55	2022	163	20,708
TOTALS	5,633			4,005	508,797

MARKET ADJUSTMENTS

TYPE	MDL	EFF. AREA	TOT ADJ PTS	EFF. BASE RATE	REPL. COST NEW	AYB	EYB	ECON	FNCT		NORM	% COND
0900	01	4,005	110.8800	146.36	586,172	1975	2000	0	0	0	13.20	86.80

1 SNGL FAM – 100% - 1976 Heated Area: 2906 HX Base Yr 1976

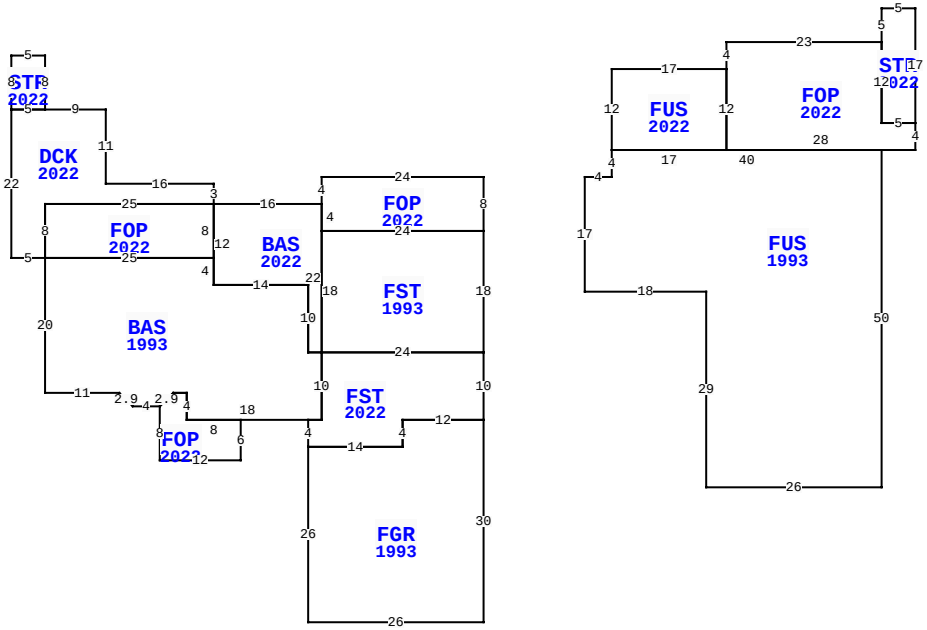

** This building has 14 Sub-Areas

97177 BLACKBEARDS WAY, YULEE

BLD DATE		LGL DATE	
XF DATE		LAND DATE	04/08/2025 MLU
INC DATE		AG DATE	

VALUATION SUMMARY

VALUATION BY	STANDARD
Tax Group: 4	Tax Dist:
BUILDING MARKET VALUE	508,797
TOTAL MARKET OB/XF VALUE	118,444
TOTAL LAND VALUE - MARKET	520,000
TOTAL MARKET VALUE	1,147,241
SOH/AGL Deduction	669,182
ASSESSED VALUE	478,059
TOTAL EXEMPTION VALUE	HX HB 50,722
BASE TAXABLE VALUE	427,337
TOTAL JUST VALUE	1,147,241
NCON VALUE	0
INCOME VALUE	
PREVIOUS YEAR MKT VALUE	953,052

PERMIT NUM	DESCRIPTION	AMT	ISSUED
B2110492	REPAIR/RRF	22,387	09/01/2021
B2100817	ADDITION	160,000	01/25/2021
B22743	XFOB	10,000	08/01/2009

SALES DATA

OFF RECORD Number	DATE	TYPE INST	Q U	V I	RSN CD	SALE PRICE

BUILDING NOTES

BUILDING DIMENSIONS

FOP=[YR=2022] W24 S4 BAS=[YR=2022] W16 DCK=[YR=2022] N3W16N11W9 STR=[YR=2022] N8 W5S8E5$ W5S22E5 BAS=[YR=1993] S20 E11 R2 D2 E4 FOP=[YR=2022] S8 E12 N6 W8 N4 W2 D2 L2 $ U2 R2 E2 S4 E18 FST=[YR=2022] S4FGR=[YR=1993] S26 E26 N30 W12 S4 W14$ E14 N4 E12 N10 FST=[YR=1993] N18 W24 S18 E24$ W24 S10 W2$ E2 N10 W2 N10 W14 N4 FOP=[YR=2022] N8W25S8E25$ W25$ N8 E25$ S12 E14 S10 E2 N22$ S4 E24 N8$ PTR=E15 FUS=[YR=1993] E4N4 FUS=[YR=2022] N12 E17 FOP=[YR=2022] N4 E23 STR=[YR=2022] N5E5 S17 W5 N12$ S12E5 S4 W28 N12$ S12 W17$ E40 S50 W26 N29 W18 N17$ W15$.

EXTRA FEATURES

L N	OB/XF CODE	DESCRIPTION	BLD	CAP	L	W	UNITS	UT	Adj R	ADJ UNIT PRICE	ORIG COND	YEAR ON	YEAR ACTUAL	Q	% COND	OB/XF MKT VALUE	NOTES
1	0300	BOAT DCK W	0	100	256	4	1,545.00	SF	40.00	40.00	100	1988	2018	3	84	51,912	
2	0310	AL GANG WY	0	100	0	0	24.00	LF	115.00	115.00	100	1988	2018	3	78	2,153	
3	0302	FLT DOCK C	0	100	20	8	160.00	SF	50.00	50.00	100	1988	2018	3	78	6,240	
4	0500	FP-PRE FAB	0	100	0	0	1.00	UT	3,500.00	3,500.00	100	1999	1999	3	81	2,835	
5	0812	CONCRETE C	0	100	0	0	4,768.00	SF	4.00	4.00	100	2000	2000	3	77	14,685	
6	0322	BOAT LFT L	0	100	0	0	2.00	UT	1,500.00	1,500.00	100	1998	2018	3	78	2,340	
7	0350	CARPORT WD	0	100	36	12	432.00	SF	13.00	13.00	100	1998	2018	3	78	4,380	
8	0920	CWALL-WD/M	1	100	0	0	106.00	LF	390.00	390.00	100	2023	2019		82	33,899	

LAND DESCRIPTION

TOTAL OB/XF 118,444

L N	USE CODE	CLS	LAND USE DESCRIPTION	CAP	R D	LOC ZONE	FRONT	DEPTH	TOT LND UTS	UNIT TYPE	D T	DPTH FACT	% COND	TOT ADJ	UNIT PRICE	ADJ UNIT PRICE	LAND VALUE	OTHER ADJUSTMENTS AND NOTES	YEAR	DENSITY	DECL	FRZ	YR	CONSRV
1	000131	C	RES CREEK	100		RSF-1	100.00	450.00	1.00	LT		1.00	1.00	1.00	520,000.00	520,000.00	520,000							

REVIEW DATE 11/08/2022 BY DJ Total Acres: 0.00 Total Land Value: 520,000 Market: 0 Agricultural: 0 Common: 520,000 PRINTED 07/30/2025 BY SYS