LOT 23
IN OR 1907/1928
ARNOLD RIDGE PB 6/251

WOODBY ROY EDWARD & KATHERINE
97226 CASTLE RIDGE DR
YULEE, FL 32097

2025

43-3N-28-082A-0023-0000

BUILDING CHARACTERISTICS

ELEMENT	CD	CONSTRUCTION
Exterior Wall	16	WD FR STUC 100
Roof Structur	03	GABLE/HIP 100
Roof Cover	03	COMP SHNGL 100
Interior Wall	05	DRYWALL 100
Interior Floo	14	CARPET 70
Interior Floo	11	CLAY TILE 30
Air Condition	03	CENTRAL 100
Heating Type	04	AIR DUCTED 100
Bedrooms		4 100
Bathrooms		3 100
Frame	02	WOOD FRAME 100
Stories	1.5	1.5 100
Units		0 100
Occupancy	00	NONE 100
Quality	02	Quality Level 02
DOR CODE	0100	SINGLE FAMILY
MAP NUM		MKT AREA 04
NEIGHBORHOOD/LOC	4033.00	

AREA TYPE	TOTAL GROSS AREA	PCT OF BASE	YEAR	TOT ADJ AREA	SUBAREA MARKET VALUE
BAS	2,453	100	2004	2,453	285,014
FGR	484	55	2004	266	30,907
FOP	78	30	2004	23	2,672
FOP	200	30	2012	60	6,971
FUS	358	100	2004	358	41,596
TOTALS	3,573			3,160	367,160

MARKET ADJUSTMENTS

TYPE	MDL	EFF. AREA	TOT ADJ PTS	EFF. BASE RATE	REPL. COST NEW	AYB	EYB	ECON	FNCT		NORM	% COND
0900	01	3,160	97.8006	129.10	407,956	2004	2004	0	0	0	10.00	90.00

1 SNGL FAM – 100% - 2015 Heated Area: 2811 HX Base Yr 2015

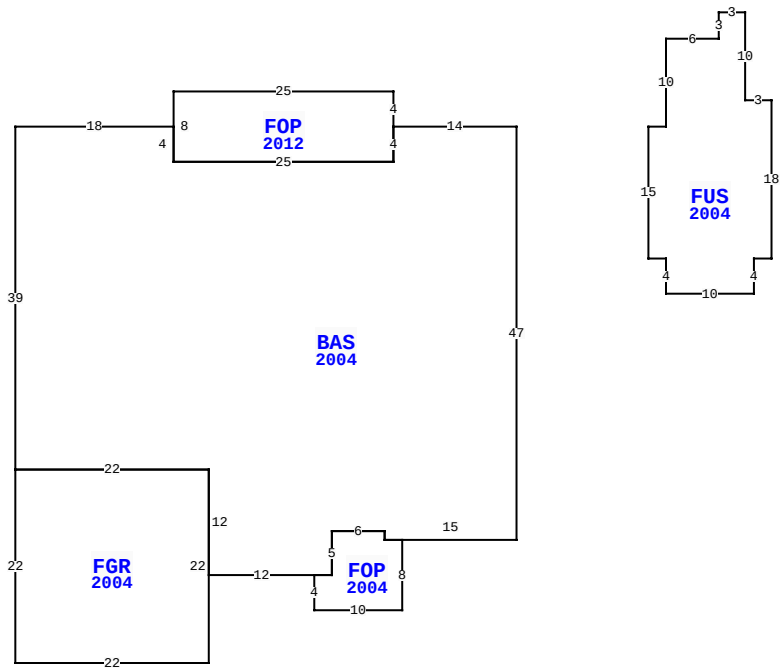

97226 CASTLE RIDGE DR, YULEE

BLD DATE	03/03/2023 NW	LGL DATE	
XF DATE		LAND DATE	04/03/2025 MLU
INC DATE		AG DATE	

NASSAU COUNTY PROPERTY

PAGE 1 of 1 4

VALUATION SUMMARY

VALUATION BY		STANDARD
Tax Group: 4	Tax Dist:	
BUILDING MARKET VALUE		367,160
TOTAL MARKET OB/XF VALUE		62,125
TOTAL LAND VALUE - MARKET		125,000
TOTAL MARKET VALUE		554,285
SOH/AGL Deduction		223,644
ASSESSED VALUE		330,641
TOTAL EXEMPTION VALUE	HX HB	50,722
BASE TAXABLE VALUE		279,919
TOTAL JUST VALUE		554,285
NCON VALUE		0
INCOME VALUE		
PREVIOUS YEAR MKT VALUE		488,653

PERMIT NUM	DESCRIPTION	AMT	ISSUED
22017094	ADDITION	16,356	11/17/2022
21016397	SWIM POOL	64,482	11/24/2021

SALES DATA

OFF RECORD Number	DATE	TYPE INST	Q U	V I	RSN CD	SALE PRICE
1907/1928	3/14/2014	SW	U	I	12	224,800
GRANTOR: FEDERAL HOME LOAN MOR						
GRANTEE: WOODBY ROY EDWARD &						
1907/1927	1/22/2014	SW	U	I	12	100
GRANTOR: BANK OF AMERICA NA						
GRANTEE: FEDERAL HOME LOAN M						

BUILDING NOTES

EXTRA FEATURES

LN	OB/XF CODE	DESCRIPTION	BLD	CAP	L	W	UNITS	UT	Adj R	ADJ UNIT PRICE	ORIG COND	YEAR ON	YEAR ACTUAL	Q	% COND	OB/XF MKT VALUE	NOTES
1	0811	CONCRETE B	0	100	0	0	957.00	SF	5.20	5.20	100	2004	2004	3	83	4,130	
2	0810	CONCRETE A	0	100	0	0	320.00	SF	6.50	6.50	100	2005	2005	3	84	1,747	
3	0911	SCRN RM A	0	100	0	0	1,142.00	SF	17.50	17.50	100	2022	2022	3	93	18,586	
4	0861	POOL GUNIT	0	100	0	0	372.00	SF	85.00	85.00	100	2022	2022	3	95	30,039	
5	0855	CONC PAVER	0	100	0	0	770.00	SF	10.00	10.00	100	2022	2022	3	99	7,623	

BUILDING DIMENSIONS

BAS=[YR=2004] W14 FOP=[YR=2012] N4 W25 S8 E25 N4$ S4 W25 N4 W18 S39 FGR=[YR=2004] S22 E22 N22 W22$ E22 S12 E12 FOP=[YR=2004] S4 E10 N8 W2 N1 W6 S5 W2$ E2 N5 E6 S1 E15 N47$ PTR=E15 FUS=[YR=2004] E2 N10 E6 N3 E3 S10 E3 S18 W2 S4 W10 N4 W2 N15$ W15$.

LAND DESCRIPTION

TOTAL OB/XF 62,125

LN	USE CODE	CLS	LAND USE DESCRIPTION	CAP	RD	LOC ZONE	FRONT	DEPTH	TOT LND UTS	UNIT TYPE	DT	DPTH FACT	% COND	TOT ADJ	UNIT PRICE	ADJ UNIT PRICE	LAND VALUE	OTHER ADJUSTMENTS AND NOTES	YEAR	DENSITY	DECL	FRZ	YR	CONSRV
1	000100	C	RES	100	0003	RSF-1	0.00	0.00	1.00	LT		1.00	1.00	1.00	125,000.00	125,000.00	125,000							

REVIEW DATE 04/17/2023 BY DJ Total Acres: 0.00 Total Land Value: 125,000 Market: 0 Agricultural: 0 Common: 125,000 PRINTED 07/30/2025 BY SYS