BLOCK 3 LOT 5
IN OR 391 PG 456
ESMT IN OR 303/341

KNIGHT ROY W & LINDA Z
85113 DERRICK ROAD
YULEE, FL 32097

2025

43-2N-27-4648-0003-0050

NASSAU COUNTY PROPERTY

BUILDING CHARACTERISTICS

ELEMENT	CD	CONSTRUCTION
Exterior Wall	12	CEDAR 50
Exterior Wall	20	FACE BRICK 50
Roof Structur	03	GABLE/HIP 100
Roof Cover	03	COMP SHNGL 100
Interior Wall	05	DRYWALL 80
Interior Wall	04	PLYWOOD 20
Interior Floo	08	SHT VINYL 50
Interior Floo	14	CARPET 50
Air Condition	03	CENTRAL 100
Heating Type	04	AIR DUCTED 100
Bedrooms		3 100
Bathrooms		2.5 100
Frame	02	WOOD FRAME 100
Stories	2.	2. 100
Units		0 100
BUD8 Adjustme	04	DIST 01 100
Occupancy	00	NONE 100
Quality	05	Quality Level 05
DOR CODE	0100	SINGLE FAMILY
MAP NUM		MKT AREA 04
NEIGHBORHOOD/LOC	4048.00	

AREA TYPE	TOTAL GROSS AREA	PCT OF BASE	YEAR	TOT ADJ AREA	SUBAREA MARKET VALUE
BAS	1,132	100	1993	1,132	103,602
FOP	30	30	1993	9	824
FOP	44	30	1993	13	1,190
FUS	1,175	100	1993	1,175	107,537
PTO	368	5	1993	18	1,647
UGR	621	45	1993	279	25,535
TOTALS	3,370			2,626	240,334

MARKET ADJUSTMENTS

TYPE	MDL	EFF. AREA	TOT ADJ PTS	EFF. BASE RATE	REPL. COST NEW	AYB	EYB	ECON	FNCT		NORM	% COND
0100	01	2,626	115.6320	115.63	303,644	1985	1990	0	0	0	20.85	79.15

1 SINGLE FAM – 100% - 0 Heated Area: 2307 HX Base Yr

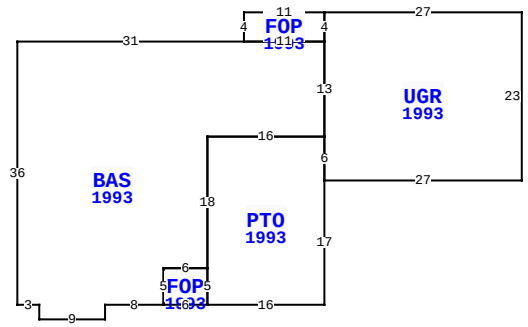

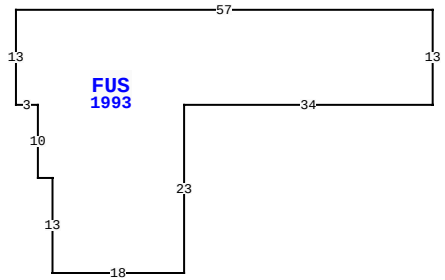

85113 DERRICK RD, YULEE

BLD DATE		LGL DATE	
XF DATE		LAND DATE	05/09/2025 MLU
INC DATE		AG DATE	

NASSAU COUNTY PROPERTY — VALUATION SUMMARY

VALUATION BY		STANDARD
Tax Group: 4	Tax Dist:	
BUILDING MARKET VALUE		240,334
TOTAL MARKET OB/XF VALUE		8,637
TOTAL LAND VALUE - MARKET		85,000
TOTAL MARKET VALUE		333,971
SOH/AGL Deduction		167,516
ASSESSED VALUE		166,455
TOTAL EXEMPTION VALUE	HX HB	50,722
BASE TAXABLE VALUE		115,733
TOTAL JUST VALUE		333,971
NCON VALUE		4,680
INCOME VALUE		
PREVIOUS YEAR MKT VALUE		293,411

PERMIT NUM	DESCRIPTION	AMT	ISSUED
B1428722	SHED	15,293	05/01/2014

SALES DATA

OFF RECORD Number	DATE	TYPE INST	Q / U	V / I	RSN CD	SALE PRICE
0391/0453	6/01/1983	QD	U	V		7,000
GRANTOR:						
GRANTEE:						
0297/0027	8/01/1979	CD	Q	V		6,950
GRANTOR:						
GRANTEE:						

BUILDING NOTES

BUILDING DIMENSIONS

FUS=[YR=1993;ORIG=-10,53] W57 S13 E3 S10 E2 S13 E18 N23 E34 N13 $
BAS=[YR=1993;ORIG=-27,4] W11 W31 S36 E3 S2 E9 N2 E8 N5 E6 N18 E16 N13 $
UGR=[YR=1993;ORIG=0,0] W27 S4 S13 S6 E27 N23 $
PTO=[YR=1993;ORIG=-27,17] S6 S17 W16 N5 N18 E16 $
FOP=[YR=1993;ORIG=-27,0] W11 S4 E11 N4 $
FOP=[YR=1993;ORIG=-49,40] E6 N5 W6 S5 $
PTR=[ORIG=0,0] S50 N50 $
.

EXTRA FEATURES

LN	OB/XF CODE	DESCRIPTION	BLD	CAP	L	W	UNITS	UT	Adj R	ADJ UNIT PRICE	ORIG COND	YEAR ON	YEAR ACTUAL	Q	% COND	OB/XF MKT VALUE	NOTES
2	0500	FP-PRE FAB	0	100	0	0	1.00	UT	3,500.00	3,500.00	100	1985	1985	3	56	1,960	
3	0810	CONCRETE A	0	100	24	20	480.00	SF	6.50	6.50	100	1993	1993	3	64	1,997	
4	0351	CARPORT MT	0	100	40	18	720.00	SF	10.00	10.00	100	2025	2015		65	4,680	

LAND DESCRIPTION

TOTAL OB/XF 8,637

LN	USE CODE	CLS	LAND USE DESCRIPTION	CAP	RD	LOC ZONE	FRONT	DEPTH	TOT LND UTS	UNIT TYPE	DT	DPTH FACT	% COND	TOT ADJ	UNIT PRICE	ADJ UNIT PRICE	LAND VALUE	OTHER ADJUSTMENTS AND NOTES	YEAR	DENSITY	DECL	FRZ	YR	CONSRV
1	000100	C	RES	100		OR	0.00	0.00	1.00	LT		1.00	1.00	1.00	85,000.00	85,000.00	85,000							

REVIEW DATE 06/09/2025 BY KWA Total Acres: 0.00 Total Land Value: 85,000 Market: 0 Agricultural: 0 Common: 85,000 PRINTED 07/30/2025 BY SYS