LOT 12
WILSON NECK SUB PB 4/2

LONGINO LISA REVOCABLE TRUST/LONGINO LISA TRUSTEE
85244 AVANT RD
YULEE, FL 32097

2025

43-2N-27-4640-0012-0000

NASSAU COUNTY PROPERTY

BUILDING CHARACTERISTICS

ELEMENT	CD	CONSTRUCTION
Exterior Wall	31	HARDIE BRD 100
Roof Structur	03	GABLE/HIP 100
Roof Cover	03	COMP SHNGL 100
Interior Wall	05	DRYWALL 100
Interior Floo	12	HARDWOOD 50
Interior Floo	14	CARPET 50
Air Condition	03	CENTRAL 100
Heating Type	04	AIR DUCTED 100
Bedrooms		3 100
Bathrooms		3 100
Frame	02	WOOD FRAME 100
Stories	1.	1. 100
Units		0 100
Occupancy	00	NONE 100
Quality	05	Quality Level 05
DOR CODE	0100	SINGLE FAMILY
MAP NUM		MKT AREA 04
NEIGHBORHOOD/LOC	4082.00	

AREA TYPE	TOTAL GROSS AREA	PCT OF BASE	YEAR	TOT ADJ AREA	SUBAREA MARKET VALUE
BAS	1,896	100	1997	1,896	264,474
BAS	88	100	2007	88	12,276
FGR	616	55	1997	339	47,287
FGR	190	55	2009	104	14,507
FOP	432	30	1997	130	18,134
FSP	430	40	2009	172	23,993
UUS	336	50	1997	168	23,434
UUS	1,180	50	1997	590	82,300
TOTALS	5,168			3,487	486,403

MARKET ADJUSTMENTS

TYPE	MDL	EFF. AREA	TOT ADJ PTS	EFF. BASE RATE	REPL. COST NEW	AYB	EYB	ECON	FNCT		NORM	% COND
0900	01	3,487	114.8620	151.62	528,699	1997	2007	0	0	0	8.00	92.00

1 SNGL FAM – 100% - 2024 Heated Area: 1984 HX Base Yr 2024

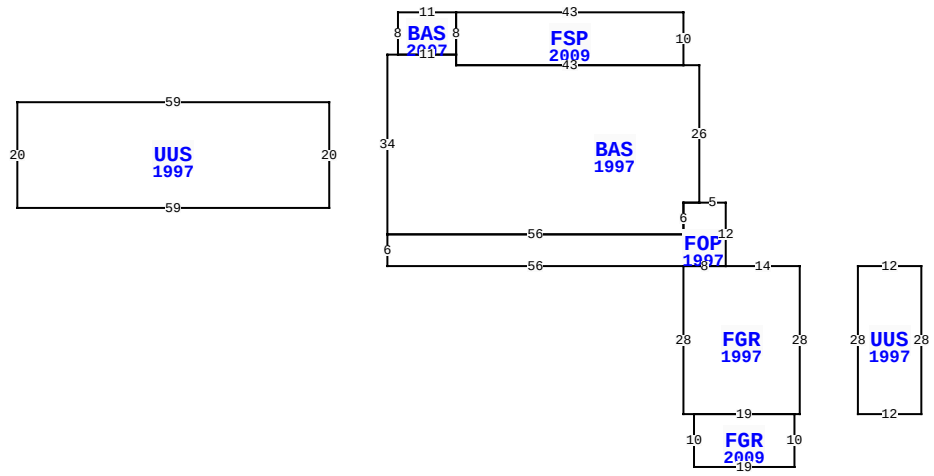

85244 AVANT RD, YULEE

BLD DATE		LGL DATE	
XF DATE		LAND DATE	05/12/2025 MLU
INC DATE		AG DATE	

NASSAU COUNTY PROPERTY — VALUATION SUMMARY

VALUATION BY		STANDARD
Tax Group: 4	Tax Dist:	
BUILDING MARKET VALUE		486,403
TOTAL MARKET OB/XF VALUE		122,851
TOTAL LAND VALUE - MARKET		325,000
TOTAL MARKET VALUE		934,254
SOH/AGL Deduction		43,248
ASSESSED VALUE		891,006
TOTAL EXEMPTION VALUE	HX HB	50,722
BASE TAXABLE VALUE		840,284
TOTAL JUST VALUE		934,254
NCON VALUE		0
INCOME VALUE		
PREVIOUS YEAR MKT VALUE		865,895

PERMIT NUM	DESCRIPTION	AMT	ISSUED
B250003369	CLOSE IN MUD RM,2	300,000	04/02/2025
B200364	4 WINDOW GLASS DO	28,000	01/15/2020
B22270	ADDITION	15,000	02/01/2009
R11751	REPAIR/RRF	1,500	02/01/2009
973961	NEW CONSTR	132,235	05/01/1997

SALES DATA

OFF RECORD Number	DATE	TYPE INST	Q / U	V / I	RSN CD	SALE PRICE
2634/1546	4/21/2023	WD	U	I	11	100
GRANTOR: LONGINO LISA						
GRANTEE: LONGINO LISA REVOCA						
2634/1544	4/21/2023	WD	U	I	11	100
GRANTOR: MACIEJEWSKI STEPHEN						
GRANTEE: MACIEJEWSKI STEPHEN						

BUILDING NOTES

BUILDING DIMENSIONS

BAS=[YR=1997;ORIG=0,0] W3 W43 N2 W11 W2 S34 E56 N6 E3 N26 $
UUS=[YR=1997;ORIG=-129,27] N20 E59 S20 W59 $
FGR=[YR=1997;ORIG=-3,38] S28 E2 E19 E1 N28 W14 W8 $
FOP=[YR=1997;ORIG=-59,32] S6 E56 E8 N12 W5 W3 S6 W56 $
FSP=[YR=2009;ORIG=-3,0] N10 W43 S8 S2 E43 $
UUS=[YR=1997;ORIG=30,38] E12 S28 W12 N28 $
FGR=[YR=2009;ORIG=-1,66] S10 E19 N10 W19 $
BAS=[YR=2007;ORIG=-46,-10] W11 S8 E11 N8 $
PTR=[ORIG=0,0] N20 S20 $
PTR=[ORIG=0,0] E50 W50 $
.

EXTRA FEATURES

LN	OB/XF CODE	DESCRIPTION	BLD	CAP	L	W	UNITS	UT	Adj R	ADJ UNIT PRICE	ORIG COND	YEAR ON	YEAR ACTUAL	Q	% COND	OB/XF MKT VALUE	NOTES
1	0500	FP-PRE FAB	0	100	0	0	1.00	UT	3,500.00	3,500.00	100	1997	1997	3	79	2,765	
2	0921	CWALL-CC P	0	100	0	0	100.00	LF	660.00	660.00	100	1997	1997	3	72	47,520	
3	1242	WD DECK A	0	100	8	6	48.00	SF	10.00	10.00	100	1998	1998	3	20	96	
4	0811	CONCRETE B	0	100	0	0	800.00	SF	5.20	5.20	100	1998	1998	3	73	3,037	
5	0350	CARPORT WD	0	100	24	15	360.00	SF	13.00	13.00	100	2002	2002	3	20	936	
6	0317	DCK PLNG W	0	100	0	0	6.00	UT	1,000.00	1,000.00	100	2002	2002	3	20	1,200	
7	0300	BOAT DCK W	0	100	0	0	480.00	SF	40.00	40.00	100	2002	2002	3	29	5,568	
8	0323	BOAT LFT H	0	100	0	0	1.00	UT	2,500.00	2,500.00	100	2002	2002	3	20	500	
9	0302	FLT DOCK C	0	100	10	4	40.00	SF	50.00	50.00	100	2002	2002	3	20	400	
10	0302	FLT DOCK C	0	100	18	4	72.00	SF	50.00	50.00	100	2002	2002	3	20	720	

TOTAL OB/XF 62,742

LAND DESCRIPTION

LN	USE CODE	CLS	LAND USE DESCRIPTION	CAP	RD	LOC ZONE	FRONT	DEPTH	TOT LND UTS	UNIT TYPE	DT	DPTH FACT	% COND	TOT ADJ	UNIT PRICE	ADJ UNIT PRICE	LAND VALUE	OTHER ADJUSTMENTS AND NOTES	YEAR	DENSITY	DECL	FRZ	YR	CONSRV
1	000131	C	RES CREEK	100	0006	RSF-1	100.00	185.00	100.00	FF		1.00	1.00	1.00	3,250.00	3,250.00	325,000							

REVIEW DATE 06/17/2025 BY KW Total Acres: 0.00 Total Land Value: 325,000 Market: 0 Agricultural: 0 Common: 325,000 PRINTED 07/30/2025 BY SYS

LOT 12
WILSON NECK SUB PB 4/2

LONGINO LISA REVOCABLE TRUST/LONGINO LISA TRUSTEE
85244 AVANT RD
YULEE, FL 32097

2025

43-2N-27-4640-0012-0000

NASSAU COUNTY PROPERTY

BUILDING CHARACTERISTICS

ELEMENT	CD	CONSTRUCTION

DOR CODE	0100	SINGLE FAMILY	
MAP NUM		MKT AREA	04
NEIGHBORHOOD/LOC	4082.00		

AREA TYPE	TOTAL GROSS AREA	PCT OF BASE	YEAR	TOT ADJ AREA	SUBAREA MARKET VALUE
TOTALS					

MARKET ADJUSTMENTS

TYPE	MDL	EFF. AREA	TOT ADJ PTS	EFF. BASE RATE	REPL. COST NEW	AYB	EYB	ECON	FNCT		NORM	% COND

VALUATION SUMMARY

VALUATION BY		STANDARD
Tax Group: 4	Tax Dist:	
BUILDING MARKET VALUE		486,403
TOTAL MARKET OB/XF VALUE		122,851
TOTAL LAND VALUE - MARKET		325,000
TOTAL MARKET VALUE		934,254
SOH/AGL Deduction		43,248
ASSESSED VALUE		891,006
TOTAL EXEMPTION VALUE	HX HB	50,722
BASE TAXABLE VALUE		840,284
TOTAL JUST VALUE		934,254
NCON VALUE		0
INCOME VALUE		
PREVIOUS YEAR MKT VALUE		865,895

PERMIT NUM	DESCRIPTION	AMT	ISSUED

SALES DATA

OFF RECORD Number	DATE	TYPE INST	Q / U	V / I	RSN CD	SALE PRICE
2634/1546	4/21/2023	WD	U	I	11	100
GRANTOR: LONGINO LISA						
GRANTEE: LONGINO LISA REVOCA						
2634/1544	4/21/2023	WD	U	I	11	100
GRANTOR: MACIEJEWSKI STEPHEN						
GRANTEE: MACIEJEWSKI STEPHEN						

BLD DATE		LGL DATE	
XF DATE		LAND DATE	05/12/2025 MLU
INC DATE		AG DATE	

BUILDING NOTES

BUILDING DIMENSIONS

EXTRA FEATURES

LN	OB/XF CODE	DESCRIPTION	BLD	CAP	L	W	UNITS	UT	Adj R	ADJ UNIT PRICE	ORIG COND	YEAR ON	YEAR ACTUAL	Q	% COND	OB/XF MKT VALUE	NOTES
11	0310	AL GANG WY	0	100	0	0	21.00	LF	115.00	115.00	100	2002	2002	3	20	483	
12	0921	CWALL-CC P	0	100	0	0	95.00	LF	660.00	660.00	100	2002	2002	3	80	50,160	
13	0855	CONC PAVER	0	100	0	0	1,050.00	SF	7.00	7.00	100	2009	2009	3	89	6,542	
14	0811	CONCRETE B	0	100	0	0	568.00	SF	5.20	5.20	100	2021	2021	3	99	2,924	

LAND DESCRIPTION

TOTAL OB/XF 60,109

LN	USE CODE	CLS	LAND USE DESCRIPTION	CAP	RD	LOC ZONE	FRONT	DEPTH	TOT LND UTS	UNIT TYPE	DT	DPTH FACT	% COND	TOT ADJ	UNIT PRICE	ADJ UNIT PRICE	LAND VALUE	OTHER ADJUSTMENTS AND NOTES	YEAR	DENSITY	DECL	FRZ	YR	CONSRV

REVIEW DATE 06/17/2025 BY KW Total Acres: 0.00 Total Land Value: 325,000 Market: 0 Agricultural: 0 Common: 325,000 PRINTED 07/30/2025 BY SYS