LOT 1
(EX OR 2045/796 & LESS S-2)
WILSON NECK SUB PB 4/2

MCLEOD NORMA J
85002 AVANT ROAD
YULEE, FL 32097

2025

43-2N-27-4640-0001-0010

NASSAU COUNTY PROPERTY

BUILDING CHARACTERISTICS

ELEMENT	CD	CONSTRUCTION
Exterior Wall	05	AVERAGE 70
Exterior Wall	20	FACE BRICK 30
Roof Structur	08	IRREGULAR 100
Roof Cover	03	COMP SHNGL 100
Interior Wall	05	DRYWALL 100
Interior Floo	14	CARPET 80
Interior Floo	12	HARDWOOD 20
Air Condition	03	CENTRAL 100
Heating Type	04	AIR DUCTED 100
Bedrooms		4 100
Bathrooms		3 100
Frame	02	WOOD FRAME 100
Stories	2.	2. 100
Units		0 100
Occupancy	00	NONE 100
Quality	04	Quality Level 04
DOR CODE	0100	SINGLE FAMILY
MAP NUM		MKT AREA 04
NEIGHBORHOOD/LOC	4082.00	

AREA TYPE	TOTAL GROSS AREA	PCT OF BASE	YEAR	TOT ADJ AREA	SUBAREA MARKET VALUE
BAS	2,208	100	1995	2,208	248,141
FGR	528	55	1995	290	32,591
FOP	178	30	1995	53	5,956
FOP	257	30	1995	77	8,653
FUS	900	100	1995	900	101,144
TOTALS	4,071			3,528	396,486

MARKET ADJUSTMENTS

TYPE	MDL	EFF. AREA	TOT ADJ PTS	EFF. BASE RATE	REPL. COST NEW	AYB	EYB	ECON	FNCT		NORM	% COND
0900	01	3,528	101.9655	134.59	474,834	1995	1995	0	0	0	16.50	83.50

1 SNGL FAM – 100% - 1996 Heated Area: 3108 HX Base Yr 1996

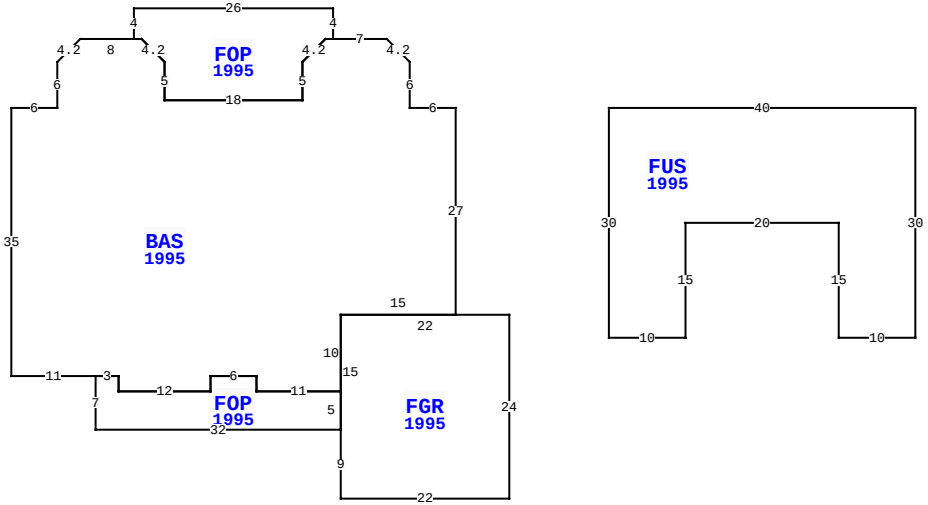

85002 AVANT RD, YULEE

BLD DATE	10/08/2007 JMDJ	LGL DATE	
XF DATE		LAND DATE	05/12/2025 MLU
INC DATE		AG DATE	

NASSAU COUNTY PROPERTY — VALUATION SUMMARY

VALUATION BY		STANDARD
Tax Group: 4	Tax Dist:	
BUILDING MARKET VALUE		447,999
TOTAL MARKET OB/XF VALUE		51,833
TOTAL LAND VALUE - MARKET		572,000
TOTAL MARKET VALUE		1,071,832
SOH/AGL Deduction		582,109
ASSESSED VALUE		489,723
TOTAL EXEMPTION VALUE	HX HB	50,722
BASE TAXABLE VALUE		439,001
TOTAL JUST VALUE		1,071,832
NCON VALUE		0
INCOME VALUE		
PREVIOUS YEAR MKT VALUE		1,008,362

PERMIT NUM	DESCRIPTION	AMT	ISSUED
B1633511	GARAGE	65,472	12/01/2016
941391	NEW CONSTR	0	12/01/1994
94-01075	NEW CONSTR	114,000	07/01/1994

SALES DATA

OFF RECORD Number	DATE	TYPE INST	Q / U	V / I	RSN CD	SALE PRICE
2509/0925	10/14/2021	QC	U	I	11	100
GRANTOR: MCLEOD LUTHER M						
GRANTEE: MCLEOD NORMA J						
0705/0927	5/26/1994	WD	Q	V		75,000
GRANTOR: MOUM LOIS CASEY/CASEY						
GRANTEE: MCLEOD LUTHER & NOR						

BUILDING NOTES

EXTRA FEATURES

LN	OB/XF CODE	DESCRIPTION	BLD	CAP	L	W	UNITS	UT	Adj R	ADJ UNIT PRICE	ORIG COND	YEAR ON	YEAR ACTUAL	Q	% COND	OB/XF MKT VALUE	NOTES
1	0500	FP-PRE FAB	0	100	0	0	1.00	UT	3,500.00	3,500.00	100	1995	1995	3	76	2,660	
2	0812	CONCRETE C	0	100	0	0	5,580.00	SF	4.00	4.00	100	1995	1995	3	68	15,178	
3	0306	BOAT RAMP	0	100	0	0	1.00	UT	3,000.00	3,000.00	100	1995	1995	3	100	3,000	
4	0920	CWALL-WD/M	0	100	0	0	110.00	LF	390.00	390.00	100	1995	1995	3	20	8,580	
5	0300	BOAT DCK W	0	100	0	0	536.00	SF	40.00	40.00	100	2020	2020	3	90	19,296	
6	0752	USP	0	100	12	8	96.00	SF	18.00	18.00	100	2020	2020	3	90	1,555	
7	0310	AL GANG WY	0	100	0	0	16.00	LF	115.00	115.00	100	1996	1996	3	20	368	
8	0303	FLT DOCK W	0	100	20	10	200.00	SF	26.00	26.00	100	1996	1996	3	23	1,196	

BUILDING DIMENSIONS

BAS=[YR=1995] W6 N6 U3 L3 W7 FOP=[YR=1995] N4 W26 S4 E1 R3 D3 S5 E18 N5 U3 R3 E1$ W1 L3 D3 S5 W18 N5 U3 L3 W8 L3 D3 S6 W6 S35 E11 FOP=[YR=1995] S7 E32 FGR=[YR=1995] S9 E22 N24 W22 S15 $ N5 W11 N2 W6 S2 W12 N2 W3$ E3 S2 E12 N2 E6 S2 E11 N10 E15 N27$ PTR=E20 FUS=[YR=1995] E40 S30 W10 N15 W20 S15 W10 N30$ W20$.

LAND DESCRIPTION

TOTAL OB/XF 51,833

LN	USE CODE	CLS	LAND USE DESCRIPTION	CAP	RD	LOC ZONE	FRONT	DEPTH	TOT LND UTS	UNIT TYPE	DT	DPTH FACT	% COND	TOT ADJ	UNIT PRICE	ADJ UNIT PRICE	LAND VALUE	OTHER ADJUSTMENTS AND NOTES	YEAR	DENSITY	DECL	FRZ	YR	CONSRV
1	000131	C	RES CREEK	100		RSF-	1176.00	215.00	176.00	FF		1.00	1.00	1.00	3,250.00	3,250.00	572,000							

REVIEW DATE 09/21/2021 BY NWA Total Acres: 0.00 Total Land Value: 572,000 Market: 0 Agricultural: 0 Common: 572,000 PRINTED 07/30/2025 BY SYS

LOT 1
(EX OR 2045/796 & LESS S-2)
WILSON NECK SUB PB 4/2

MCLEOD NORMA J
85002 AVANT ROAD
YULEE, FL 32097

2025

43-2N-27-4640-0001-0010

BUILDING CHARACTERISTICS

ELEMENT	CD	CONSTRUCTION
Exterior Wall	05	AVERAGE 50
Exterior Wall	20	FACE BRICK 50
Roof Structur	03	GABLE/HIP 100
Roof Cover	03	COMP SHNGL 100
Interior Wall	05	DRYWALL 100
Interior Floo	03	CONC FINSH 50
Interior Floo	14	CARPET 50
Air Condition	03	CENTRAL 100
Heating Type	04	AIR DUCTED 100
Bedrooms		0 100
Bathrooms		0 100
Frame	02	WOOD FRAME 100
Stories	2.	2. 100
Units		0 100
Occupancy	00	NONE 100
Quality	04	Quality Level 04
DOR CODE	0100	SINGLE FAMILY
MAP NUM		MKT AREA 04
NEIGHBORHOOD/LOC	4082.00	

AREA TYPE	TOTAL GROSS AREA	PCT OF BASE	YEAR	TOT ADJ AREA	SUBAREA MARKET VALUE
BAS	590	100	2017	590	20,330
FOP	72	30	2017	22	758
FUS	864	100	2017	864	29,770
UST	43	45	2017	19	655
TOTALS	1,569			1,495	51,513

MARKET ADJUSTMENTS

TYPE	MDL	EFF. AREA	TOT ADJ PTS	EFF. BASE RATE	REPL. COST NEW	AYB	EYB	ECON	FNCT		NORM	% COND
6500	01	1,495	100.1385	37.05	55,390	2017	2017	0	0	0	7.00	93.00

3 GARAGE RES – 100% - 1996 Heated Area: 1454 HX Base Yr 1996

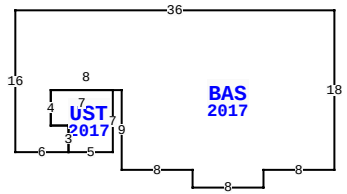

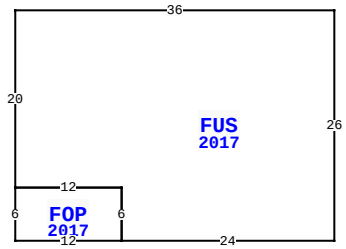

NASSAU COUNTY PROPERTY

PAGE 2 of 2 4

VALUATION SUMMARY

VALUATION BY		STANDARD
Tax Group: 4	Tax Dist:	
BUILDING MARKET VALUE		447,999
TOTAL MARKET OB/XF VALUE		51,833
TOTAL LAND VALUE - MARKET		572,000
TOTAL MARKET VALUE		1,071,832
SOH/AGL Deduction		582,109
ASSESSED VALUE		489,723
TOTAL EXEMPTION VALUE	HX HB	50,722
BASE TAXABLE VALUE		439,001
TOTAL JUST VALUE		1,071,832
NCON VALUE		0
INCOME VALUE		
PREVIOUS YEAR MKT VALUE		1,008,362

PERMIT NUM	DESCRIPTION	AMT	ISSUED

SALES DATA

OFF RECORD Number	DATE	TYPE INST	Q / U	V / I	RSN CD	SALE PRICE
2509/0925	10/14/2021	QC	U	I	11	100
GRANTOR: MCLEOD LUTHER M						
GRANTEE: MCLEOD NORMA J						
0705/0927	5/26/1994	WD	Q	V		75,000
GRANTOR: MOUM LOIS CASEY/CASEY						
GRANTEE: MCLEOD LUTHER & NOR						

BLD DATE	10/08/2007 JMDJ	LGL DATE	
XF DATE		LAND DATE	05/12/2025 MLU
INC DATE		AG DATE	

85002 AVANT RD, YULEE

BUILDING NOTES

EXTRA FEATURES

L N	OB/XF CODE	DESCRIPTION	BLD	CAP	L	W	UNITS	UT	Adj R	ADJ UNIT PRICE	ORIG COND	YEAR ON	YEAR ACTUAL	Q	% COND	OB/XF MKT VALUE	NOTES

BUILDING DIMENSIONS

BAS=[YR=2017] W36 S16 E6 UST=[YR=2017] E5 N7 W7 S4 E2 S3$ N3 W2 N4 E8 S9 E8 S2 E8 N2 E8 N18$ PTR=[YR=2017] E30 FUS=[YR=2017] E36 S26 W24 FOP=[YR=2017] W12 N6 E12 S6$ N6 W12 N20$ W30$.

LAND DESCRIPTION

TOTAL OB/XF 0

L N	USE CODE	CLS	LAND USE DESCRIPTION	CAP	R D	LOC ZONE	FRONT	DEPTH	TOT LND UTS	UNIT TYPE	D T	DPTH FACT	% COND	TOT ADJ	UNIT PRICE	ADJ UNIT PRICE	LAND VALUE	OTHER ADJUSTMENTS AND NOTES	YEAR	DENSITY	DECL	FRZ	YR	CONSRV

REVIEW DATE 09/21/2021 BY NWA Total Acres: 0.00 Total Land Value: 572,000 Market: 0 Agricultural: 0 Common: 572,000 PRINTED 07/30/2025 BY SYS