BLOCK 4 LOT 13
LOFTON BLUFF #2 PB 4/92 & 93

NESBITT DANIEL & DEBORAH/
85187 ANGIE RD
YULEE, FL 32097

2025

43-2N-27-4621-0004-0130

NASSAU COUNTY PROPERTY

BUILDING CHARACTERISTICS

ELEMENT	CD	CONSTRUCTION
Exterior Wall	05	AVERAGE 90
Exterior Wall	25	MOD METAL 10
Roof Structur	03	GABLE/HIP 100
Roof Cover	12	MODULAR MT 100
Interior Wall	05	DRYWALL 100
Interior Floo	14	CARPET 60
Interior Floo	15	HARDTILE 40
Air Condition	03	CENTRAL 100
Heating Type	04	AIR DUCTED 100
Bedrooms		3 100
Bathrooms		3 100
Frame	02	WOOD FRAME 100
Stories	1.	1. 100
Units		0 100
BUD8 Adjustme	04	DIST 01 100
Quality	03	Quality Level 03
DOR CODE	0100	SINGLE FAMILY
MAP NUM		MKT AREA 04
NEIGHBORHOOD/LOC	4048.00	

AREA TYPE	TOTAL GROSS AREA	PCT OF BASE	YEAR	TOT ADJ AREA	SUBAREA MARKET VALUE
BAS	740	100	1993	740	22,289
BAS	160	100	1994	160	4,819
BAS	564	100	1994	564	16,988
BAS	80	100	2005	80	2,410
FEP	100	85	2005	85	2,560
UEP	56	70	2005	39	1,175
UOP	144	25	1994	36	1,084
TOTALS	1,844			1,704	51,325

MARKET ADJUSTMENTS

TYPE	MDL	EFF. AREA	TOT ADJ PTS	EFF. BASE RATE	REPL. COST NEW	AYB	EYB	ECON	FNCT		NORM	% COND
0820	02	1,704	125.5000	100.40	171,082	1974	1993	0	0	0	70.00	30.00

1 M/H 93- – 0% - 0 Heated Area: 1629 HX Base Yr

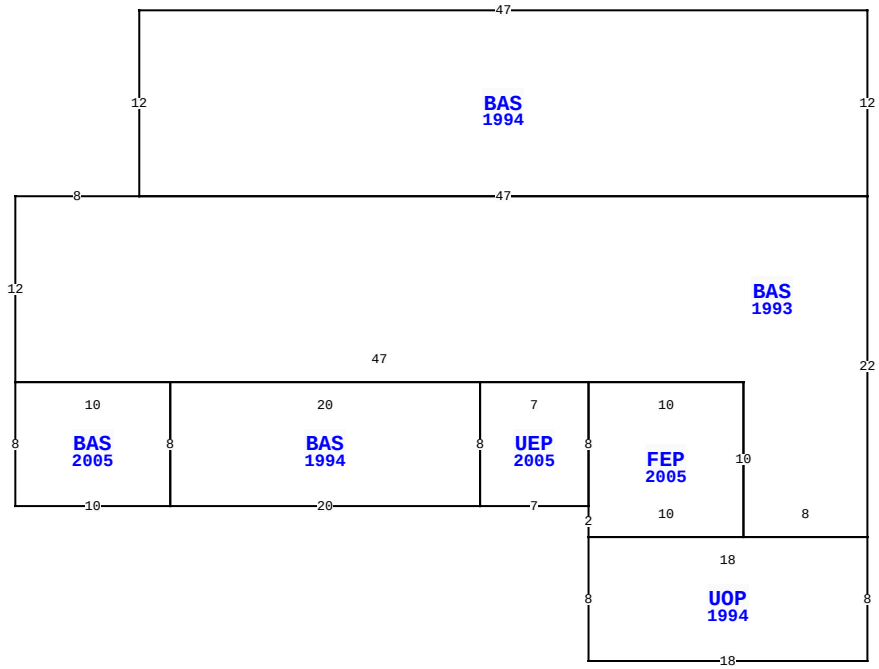

BLD DATE	11/10/2014 KK	LGL DATE	
XF DATE		LAND DATE	05/09/2025 MLU
INC DATE		AG DATE	

85187 ANGIE RD, YULEE

VALUATION SUMMARY

VALUATION BY	STANDARD
Tax Group: 4	Tax Dist:
BUILDING MARKET VALUE	198,413
TOTAL MARKET OB/XF VALUE	3,203
TOTAL LAND VALUE - MARKET	85,000
TOTAL MARKET VALUE	286,616
SOH/AGL Deduction	13,615
ASSESSED VALUE	273,001
TOTAL EXEMPTION VALUE	0
BASE TAXABLE VALUE	273,001
TOTAL JUST VALUE	286,616
NCON VALUE	0
INCOME VALUE	
PREVIOUS YEAR MKT VALUE	268,481

PERMIT NUM	DESCRIPTION	AMT	ISSUED
20005427	REROOF	6,900	07/09/2020
8418	TEMP POLE	0	09/08/1992
8920	MH MOVE-ON	28,000	06/02/1992
5708	GARAGE	9,792	05/08/1989
4605	ADDITION	4,488	01/19/1988

SALES DATA

OFF RECORD Number	DATE	TYPE INST	Q / U	V / I	RSN CD	SALE PRICE
2379/0976	7/27/2020	WD	Q	I	02	200,000
GRANTOR: KITLER PATRICIA L						
GRANTEE: NESBITT DANIEL & DE						
2278/0582	5/28/2019	FJ	U	I	11	0
GRANTOR: WILLIS PATRICIA HURDL						
GRANTEE: KITLER PATRICIA L						

BUILDING NOTES

BUILDING DIMENSIONS

BAS=[YR=1994] W47 S12 BAS=[YR=1993] W8 S12 BAS=[YR=2005] S8 E10 BAS=[YR=1994] E20 UEP=[YR=2005] E7 FEP=[YR=2005] S2 UOP=[YR=1994] S8 E18 N8 W18 $ E10 N10 W10 S8 $ N8 W7 S8 $ N8 W20 S8 $ N8 W10 $ E47 S10 E8 N22 W47 $ E47 N12 $.

EXTRA FEATURES

LN	OB/XF CODE	DESCRIPTION	BLD	CAP	L	W	UNITS	UT	Adj R	ADJ UNIT PRICE	ORIG COND	YEAR ON	YEAR ACTUAL	Q	% COND	OB/XF MKT VALUE	NOTES
1	0350	CARPORT WD	0	0	20	20	400.00	SF	9.75	9.75	100	1992	1992	3	20	780	
2	1242	WD DECK A	0	0	6	6	36.00	SF	10.00	10.00	100	1993	1993	3	20	72	
3	0811	CONCRETE B	0	0	0	0	656.00	SF	5.20	5.20	100	1993	1993	3	64	2,183	
4	0351	CARPORT MT	0	0	20	12	240.00	SF	3.50	3.50	100	1990	1990	3	20	168	

LAND DESCRIPTION

TOTAL OB/XF 3,203

LN	USE CODE	CLS	LAND USE DESCRIPTION	CAP	RD	LOC ZONE	FRONT	DEPTH	TOT LND UTS	UNIT TYPE	DT	DPTH FACT	% COND	TOT ADJ	UNIT PRICE	ADJ UNIT PRICE	LAND VALUE	OTHER ADJUSTMENTS AND NOTES	YEAR	DENSITY	DECL	FRZ	YR	CONSRV
1	000100	C	RES	0	0006	OR	0.00	0.00	1.00	LT		1.00	1.00	1.00	85,000.00	85,000.00	85,000							

REVIEW DATE 10/19/2020 BY NW Total Acres: 0.00 Total Land Value: 85,000 Market: 0 Agricultural: 0 Common: 85,000 PRINTED 07/30/2025 BY SYS

BLOCK 4 LOT 13
LOFTON BLUFF #2 PB 4/92 & 93

NESBITT DANIEL & DEBORAH/
85187 ANGIE RD
YULEE, FL 32097

2025

43-2N-27-4621-0004-0130

BUILDING CHARACTERISTICS

ELEMENT	CD	CONSTRUCTION
Exterior Wall	05	AVERAGE 100
Roof Structur	03	GABLE/HIP 100
Roof Cover	03	COMP SHNGL 100
Interior Wall	05	DRYWALL 100
Interior Floo	14	CARPET 60
Interior Floo	08	SHT VINYL 40
Air Condition	03	CENTRAL 100
Heating Type	04	AIR DUCTED 100
Bedrooms		2 100
Bathrooms		1 100
Frame	02	WOOD FRAME 100
Stories	1.5	1.5 100
Units		0 100
Occupancy	00	NONE 100
Quality	03	Quality Level 03

DOR CODE 0100 SINGLE FAMILY
MAP NUM | MKT AREA 04
NEIGHBORHOOD/LOC 4048.00

AREA TYPE	TOTAL GROSS AREA	PCT OF BASE	YEAR	TOT ADJ AREA	SUBAREA MARKET VALUE
BAS	759	100	1993	759	69,042
FST	182	55	2005	100	9,096
FUS	336	100	1993	336	30,564
UCP	330	20	1994	66	6,003
USP	128	30	1994	38	3,457
UST	402	45	2005	181	16,464
TOTALS	2,137			1,480	134,626

MARKET ADJUSTMENTS

TYPE	MDL	EFF. AREA	TOT ADJ PTS	EFF. BASE RATE	REPL. COST NEW	AYB	EYB	ECON	FNCT		NORM	% COND
0100	01	1,480	106.0800	106.08	156,998	1988	1995	0	0	0	14.25	85.75

2 SINGLE FAM – 0% - 0 Heated Area: 1095 HX Base Yr

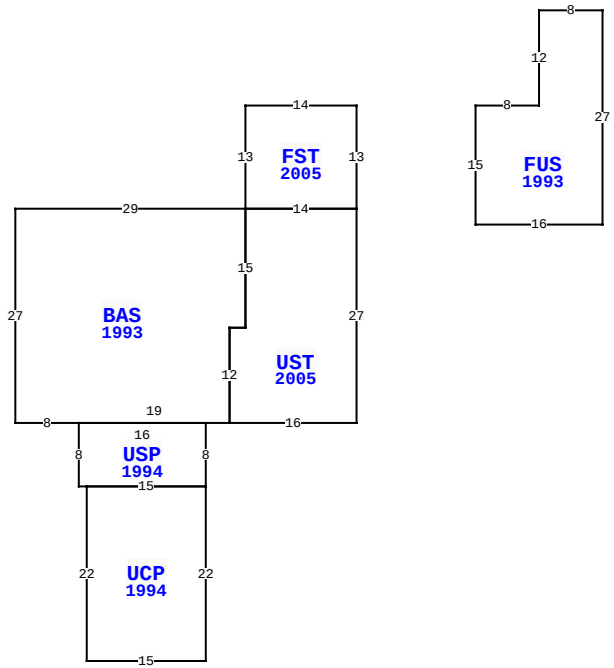

85187 ANGIE RD, YULEE

BLD DATE	11/10/2014 KK	LGL DATE	
XF DATE		LAND DATE	05/09/2025 MLU
INC DATE		AG DATE	

NASSAU COUNTY PROPERTY

PAGE 2 of 4 4

VALUATION SUMMARY

VALUATION BY	STANDARD
Tax Group: 4	Tax Dist:
BUILDING MARKET VALUE	198,413
TOTAL MARKET OB/XF VALUE	3,203
TOTAL LAND VALUE - MARKET	85,000
TOTAL MARKET VALUE	286,616
SOH/AGL Deduction	13,615
ASSESSED VALUE	273,001
TOTAL EXEMPTION VALUE	0
BASE TAXABLE VALUE	273,001
TOTAL JUST VALUE	286,616
NCON VALUE	0
INCOME VALUE	
PREVIOUS YEAR MKT VALUE	268,481

PERMIT NUM	DESCRIPTION	AMT	ISSUED

SALES DATA

OFF RECORD Number	DATE	TYPE INST	Q U	V I	RSN CD	SALE PRICE
2379/0976	7/27/2020	WD	Q	I	02	200,000
GRANTOR: KITLER PATRICIA L						
GRANTEE: NESBITT DANIEL & DE						
2278/0582	5/28/2019	FJ	U	I	11	0
GRANTOR: WILLIS PATRICIA HURDL						
GRANTEE: KITLER PATRICIA L						

BUILDING NOTES

BUILDING DIMENSIONS

FST=[YR=2005] W14 S13 BAS=[YR=1993] W29 S27 E8 USP=[YR=1994] S8 E1 UCP=[YR=1994] S22 E15 N22 W15 $ E15 N8 W16 $ E19 UST=[YR=2005] E16 N27 W14 S15 W2 S12 $ N12 E2 N15 $ E14 N13 $ PTR= E15 FUS=[YR=1993] E8 N12 E8 S27 W16 N15 $ W15 $.

EXTRA FEATURES

L N	OB/XF CODE	DESCRIPTION	BLD	CAP	L	W	UNITS	UT	Adj R	ADJ UNIT PRICE	ORIG COND	YEAR ON	YEAR ACTUAL	Q	% COND	OB/XF MKT VALUE	NOTES

LAND DESCRIPTION

TOTAL OB/XF 0

L N	USE CODE	CLS	LAND USE DESCRIPTION	CAP	R D	LOC ZONE	FRONT	DEPTH	TOT LND UTS	UNIT TYPE	D T	DPTH FACT	% COND	TOT ADJ	UNIT PRICE	ADJ UNIT PRICE	LAND VALUE	OTHER ADJUSTMENTS AND NOTES	YEAR	DENSITY	DECL	FRZ	YR	CONSRV

REVIEW DATE 10/19/2020 BY NW Total Acres: 0.00 Total Land Value: 85,000 Market: 0 Agricultural: 0 Common: 85,000 PRINTED 07/30/2025 BY SYS

BLOCK 4 LOT 13
LOFTON BLUFF #2 PB 4/92 & 93

NESBITT DANIEL & DEBORAH/
85187 ANGIE RD
YULEE, FL 32097

2025

43-2N-27-4621-0004-0130

NASSAU COUNTY PROPERTY

BUILDING CHARACTERISTICS

ELEMENT	CD	CONSTRUCTION
Exterior Wall	05	AVERAGE 100
Roof Structur	03	GABLE/HIP 100
Roof Cover	12	MODULAR MT 100
Interior Wall	04	PLYWOOD 100
Interior Floo	02	MIN PLYWD 50
Interior Floo	03	CONC FINSH 50
Air Condition	01	NONE 100
Heating Type	01	NONE 100
Bedrooms		0 100
Bathrooms		0 100
Frame	02	WOOD FRAME 100
Stories	1.	1. 100
Units		0 100
Occupancy	00	NONE 100
Quality	03	Quality Level 03

DOR CODE 0100 SINGLE FAMILY
MAP NUM | MKT AREA 04
NEIGHBORHOOD/LOC 4048.00

AREA TYPE	TOTAL GROSS AREA	PCT OF BASE	YEAR	TOT ADJ AREA	SUBAREA MARKET VALUE
BAS	459	100	1993	459	5,120
UCP	221	20	1993	44	491
TOTALS	680			503	5,611

MARKET ADJUSTMENTS

TYPE	MDL	EFF. AREA	TOT ADJ PTS	EFF. BASE RATE	REPL. COST NEW	AYB	EYB	ECON	FNCT		NORM	% COND
8600	01	503	85.8000	22.31	11,222	1988	1988	0	0	0	50.00	50.00

3 BARNS – 0% - 0 Heated Area: 459 HX Base Yr

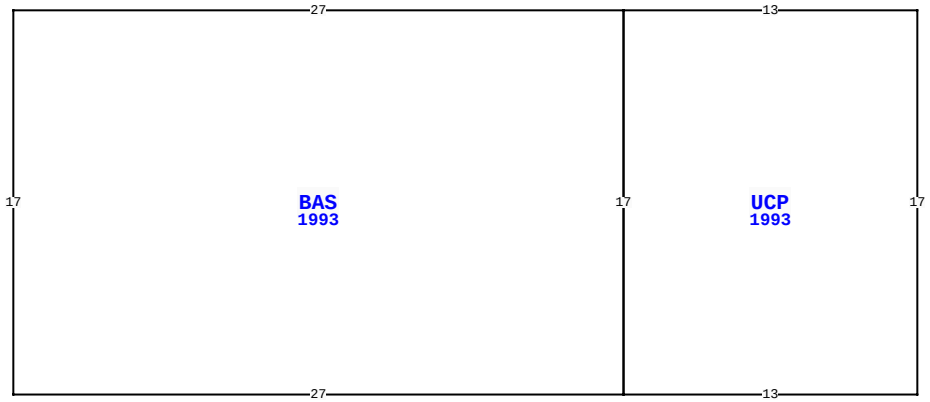

85187 ANGIE RD, YULEE

BLD DATE	11/10/2014 KK	LGL DATE	
XF DATE		LAND DATE	05/09/2025 MLU
INC DATE		AG DATE	

VALUATION SUMMARY

VALUATION BY	STANDARD
Tax Group: 4	Tax Dist:
BUILDING MARKET VALUE	198,413
TOTAL MARKET OB/XF VALUE	3,203
TOTAL LAND VALUE - MARKET	85,000
TOTAL MARKET VALUE	286,616
SOH/AGL Deduction	13,615
ASSESSED VALUE	273,001
TOTAL EXEMPTION VALUE	0
BASE TAXABLE VALUE	273,001
TOTAL JUST VALUE	286,616
NCON VALUE	0
INCOME VALUE	
PREVIOUS YEAR MKT VALUE	268,481

PERMIT NUM	DESCRIPTION	AMT	ISSUED

SALES DATA

OFF RECORD Number	DATE	TYPE INST	Q / U	V / I	RSN CD	SALE PRICE
2379/0976	7/27/2020	WD	Q	I	02	200,000
GRANTOR: KITLER PATRICIA L						
GRANTEE: NESBITT DANIEL & DE						
2278/0582	5/28/2019	FJ	U	I	11	0
GRANTOR: WILLIS PATRICIA HURDL						
GRANTEE: KITLER PATRICIA L						

BUILDING NOTES

BUILDING DIMENSIONS

UCP=[YR=1993] W13 BAS=[YR=1993] W27 S17 E27 N17 $ S17 E13 N17 $.

EXTRA FEATURES

L N	OB/XF CODE	DESCRIPTION	BLD	CAP	L	W	UNITS	UT	Adj R	ADJ UNIT PRICE	ORIG COND	YEAR ON	YEAR ACTUAL	Q	% COND	OB/XF MKT VALUE	NOTES

LAND DESCRIPTION

TOTAL OB/XF 0

L N	USE CODE	CLS	LAND USE DESCRIPTION	CAP	R D	LOC ZONE	FRONT	DEPTH	TOT LND UTS	UNIT TYPE	D T	DPTH FACT	% COND	TOT ADJ	UNIT PRICE	ADJ UNIT PRICE	LAND VALUE	OTHER ADJUSTMENTS AND NOTES	YEAR	DENSITY	DECL	FRZ	YR	CONSRV

REVIEW DATE 10/19/2020 BY NW Total Acres: 0.00 Total Land Value: 85,000 Market: 0 Agricultural: 0 Common: 85,000 PRINTED 07/30/2025 BY SYS

BLOCK 4 LOT 13
LOFTON BLUFF #2 PB 4/92 & 93

NESBITT DANIEL & DEBORAH/
85187 ANGIE RD
YULEE, FL 32097

2025

43-2N-27-4621-0004-0130

NASSAU COUNTY PROPERTY

BUILDING CHARACTERISTICS

ELEMENT	CD	CONSTRUCTION
Exterior Wall	05	AVERAGE 100
Roof Structur	04	WOOD TRUSS 100
Roof Cover	12	MODULAR MT 100
Interior Wall	04	PLYWOOD 100
Interior Floo	14	CARPET 80
Interior Floo	08	SHT VINYL 20
Air Condition	02	WINDOW 100
Heating Type	01	NONE 100
Bedrooms		0 100
Bathrooms		0 100
Frame	02	WOOD FRAME 100
Stories	1.	1. 100
Units		0 100
Occupancy	00	NONE 100
Quality	03	Quality Level 03
DOR CODE	0100	SINGLE FAMILY
MAP NUM		MKT AREA 04
NEIGHBORHOOD/LOC	4048.00	

AREA TYPE	TOTAL GROSS AREA	PCT OF BASE	YEAR	TOT ADJ AREA	SUBAREA MARKET VALUE
BAS	396	100	1993	396	6,851
TOTALS	396			396	6,851

MARKET ADJUSTMENTS

TYPE	MDL	EFF. AREA	TOT ADJ PTS	EFF. BASE RATE	REPL. COST NEW	AYB	EYB	ECON	FNCT		NORM	% COND
6500	01	396	93.5000	34.60	13,702	1989	1995	0	0	0	50.00	50.00

4 GARAGE RES – 0% - 0 Heated Area: 396 HX Base Yr

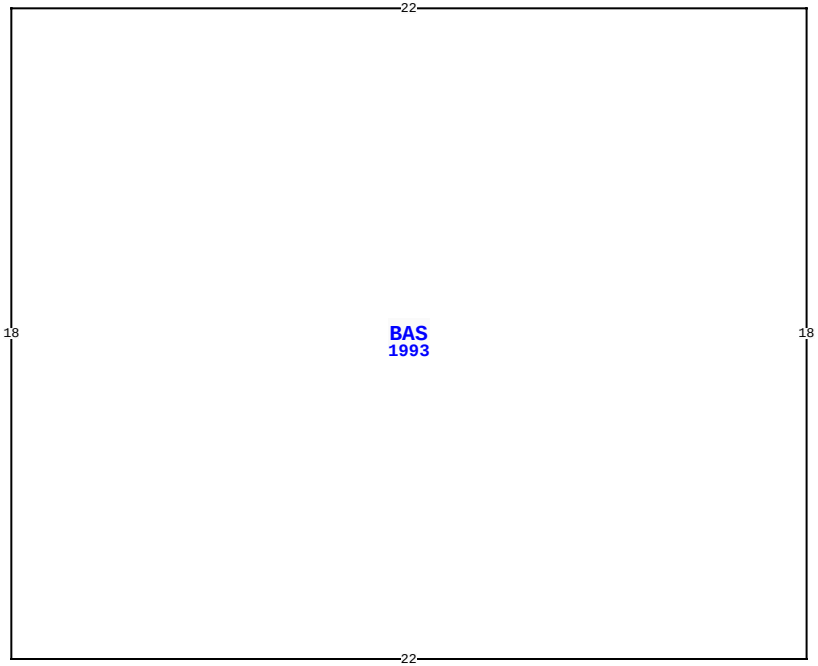

85187 ANGIE RD, YULEE

BLD DATE	11/10/2014 KK	LGL DATE	
XF DATE		LAND DATE	05/09/2025 MLU
INC DATE		AG DATE	

VALUATION SUMMARY

VALUATION BY	STANDARD
Tax Group: 4	Tax Dist:
BUILDING MARKET VALUE	198,413
TOTAL MARKET OB/XF VALUE	3,203
TOTAL LAND VALUE - MARKET	85,000
TOTAL MARKET VALUE	286,616
SOH/AGL Deduction	13,615
ASSESSED VALUE	273,001
TOTAL EXEMPTION VALUE	0
BASE TAXABLE VALUE	273,001
TOTAL JUST VALUE	286,616
NCON VALUE	0
INCOME VALUE	
PREVIOUS YEAR MKT VALUE	268,481

PERMIT NUM	DESCRIPTION	AMT	ISSUED

SALES DATA

OFF RECORD Number	DATE	TYPE INST	Q / U	V / I	RSN CD	SALE PRICE
2379/0976	7/27/2020	WD	Q	I	02	200,000
GRANTOR: KITLER PATRICIA L						
GRANTEE: NESBITT DANIEL & DE						
2278/0582	5/28/2019	FJ	U	I	11	0
GRANTOR: WILLIS PATRICIA HURDL						
GRANTEE: KITLER PATRICIA L						

BUILDING NOTES

BUILDING DIMENSIONS

BAS=[YR=1993] W22 S18 E22 N18 $.

EXTRA FEATURES

LN	OB/XF CODE	DESCRIPTION	BLD	CAP	L	W	UNITS	UT	Adj R	ADJ UNIT PRICE	ORIG COND	YEAR ON	YEAR ACTUAL	Q	% COND	OB/XF MKT VALUE	NOTES

LAND DESCRIPTION

TOTAL OB/XF 0

LN	USE CODE	CLS	LAND USE DESCRIPTION	CAP	RD	LOC ZONE	FRONT	DEPTH	TOT LND UTS	UNIT TYPE	DT	DPTH FACT	% COND	TOT ADJ	UNIT PRICE	ADJ UNIT PRICE	LAND VALUE	OTHER ADJUSTMENTS AND NOTES	YEAR	DENSITY	DECL	FRZ	YR	CONSRV

REVIEW DATE 10/19/2020 BY NW Total Acres: 0.00 Total Land Value: 85,000 Market: 0 Agricultural: 0 Common: 85,000 PRINTED 07/30/2025 BY SYS