BLOCK 1 LOT 9
IN OR 2099/1590
LOFTON BLUFF 2 PB 4/92 & 93

ATEN CATHY G & STEPHEN MICHAEL
85732 BLACKMON RD
YULEE, FL 32097

2025

43-2N-27-4621-0001-0090

NASSAU COUNTY PROPERTY

BUILDING CHARACTERISTICS

ELEMENT	CD	CONSTRUCTION
Exterior Wall	31	HARDIE BRD 100
Roof Structur	03	GABLE/HIP 100
Roof Cover	03	COMP SHNGL 100
Interior Wall	05	DRYWALL 100
Interior Floo	11	CLAY TILE 50
Interior Floo	14	CARPET 50
Air Condition	03	CENTRAL 100
Heating Type	04	AIR DUCTED 100
Bedrooms		4 100
Bathrooms		3.5 100
Frame	02	WOOD FRAME 100
Stories	1.5	1.5 100
Units		0 100
Occupancy	00	NONE 100
Quality	03	Quality Level 03
DOR CODE	0100	SINGLE FAMILY
MAP NUM		MKT AREA 04
NEIGHBORHOOD/LOC	4048.00	

AREA TYPE	TOTAL GROSS AREA	PCT OF BASE	YEAR	TOT ADJ AREA	SUBAREA MARKET VALUE
BAS	3,050	100	2020	3,050	478,277
DCK	48	10	2020	5	784
FGR	813	55	2020	447	70,095
FOP	262	30	2020	79	12,388
FOP	338	30	2020	101	15,838
FUS	392	100	2020	392	61,470
STP	24	10	2020	2	313
STP	24	10	2020	2	313
STR	126	10	2020	13	2,039
TOTALS	5,077			4,091	641,518

MARKET ADJUSTMENTS

TYPE	MDL	EFF. AREA	TOT ADJ PTS	EFF. BASE RATE	REPL. COST NEW	AYB	EYB	ECON	FNCT		NORM	% COND
0500	01	4,091	100.7600	159.20	651,287	2020	2020	0	0	0	1.50	98.50

1 SFR CUST – 100% - 2020 Heated Area: 3442 HX Base Yr 2020

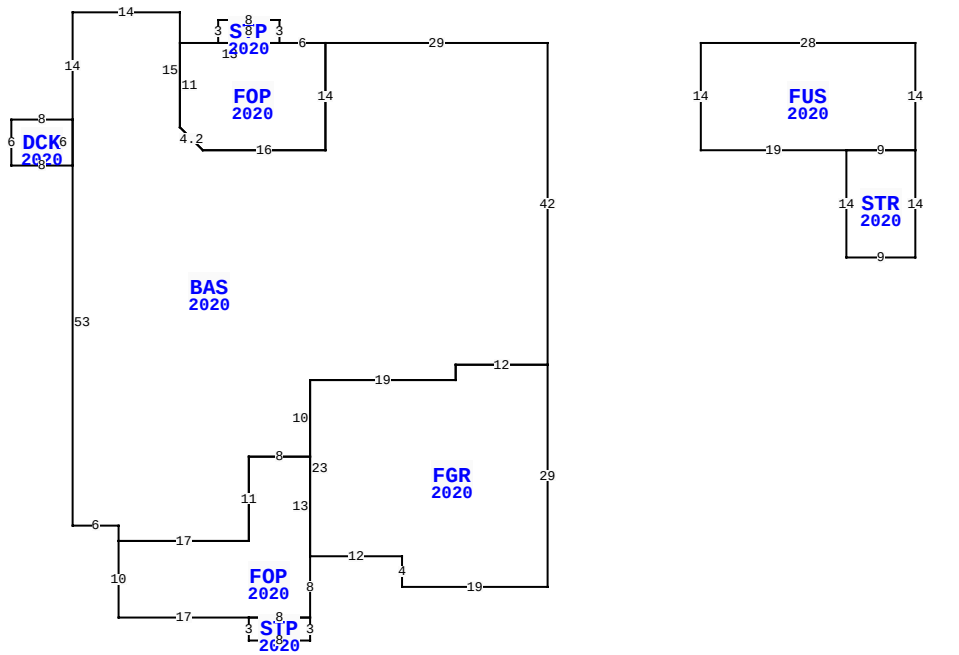

85732 BLACKMON RD, YULEE

BLD DATE		LGL DATE	
XF DATE		LAND DATE	05/08/2025 MLU
INC DATE		AG DATE	

VALUATION SUMMARY

VALUATION BY		STANDARD
Tax Group: 4	Tax Dist:	
BUILDING MARKET VALUE		641,518
TOTAL MARKET OB/XF VALUE		25,772
TOTAL LAND VALUE - MARKET		140,000
TOTAL MARKET VALUE		807,290
SOH/AGL Deduction		256,689
ASSESSED VALUE		550,601
TOTAL EXEMPTION VALUE	HX HB	50,722
BASE TAXABLE VALUE		499,879
TOTAL JUST VALUE		807,290
NCON VALUE		0
INCOME VALUE		
PREVIOUS YEAR MKT VALUE		686,855

PERMIT NUM	DESCRIPTION	AMT	ISSUED
19013068	CO ISSUED	0	12/31/2019
19000216	NEW CONSTR	432,621	01/09/2019

SALES DATA

OFF RECORD Number	DATE	TYPE INST	Q / U	V / I	RSN CD	SALE PRICE
2099/1590	1/31/2017	WD	Q	V	01	150,000
GRANTOR: EVANS JOHN R TRUSTEE						
GRANTEE: ATEN CATHY G & STEP						
2099/1589	1/31/2017	WD	U	V	11	100
GRANTOR: ANN DEKAY EVANS LIVIN						
GRANTEE: JOHN R EVANS LIVING						

BUILDING NOTES

BUILDING DIMENSIONS

BAS=[YR=2020] W29 FOP=[YR=2020] W6 STP=[YR=2020] N3 W8 S3 E8$ W13 S11 R3 D3 E16 N14$ S14 W16 U3 L3 N15 W14 S14 DCK=[YR=2020] W8 S6 E8 N6$ S53 E6 S2 FOP=[YR=2020] S10 E17 STP=[YR=2020] S3 E8 N3 W8$ E8 N8 FGR=[YR=2020] E12 S4 E19 N29 W12 S2 W19 S23$ N13 W8 S11 W17$ E17 N11 E8 N10 E19 N2 E12 N42$ PTR=E20 FUS=[YR=2020] S14 E19 STR=[YR=2020] S14 E9 N14 W9$ E9 N14 W28$ W20$.

EXTRA FEATURES

LN	OB/XF CODE	DESCRIPTION	BLD	CAP	L	W	UNITS	UT	Adj R	ADJ UNIT PRICE	ORIG COND	YEAR ON	YEAR ACTUAL	Q	% COND	OB/XF MKT VALUE	NOTES
1	0812	CONCRETE C	0	100	0	0	4,248.00	SF	4.00	4.00	100	2020	2020	3	98	16,652	
2	0300	BOAT DCK W	0	100	0	0	240.00	SF	40.00	40.00	100	2024	2022		95	9,120	

LAND DESCRIPTION

TOTAL OB/XF 25,772

LN	USE CODE	CLS	LAND USE DESCRIPTION	CAP	RD	LOC ZONE	FRONT	DEPTH	TOT LND UTS	UNIT TYPE	DT	DPTH FACT	% COND	TOT ADJ	UNIT PRICE	ADJ UNIT PRICE	LAND VALUE	OTHER ADJUSTMENTS AND NOTES	YEAR	DENSITY	DECL	FRZ	YR	CONSRV
1	000131	C	RES CREEK	100		OR	0.00	0.00	100.00	FF		1.00	1.00	1.00	1,400.00	1,400.00	140,000							

REVIEW DATE 07/18/2024 BY KWA Total Acres: 0.00 Total Land Value: 140,000 Market: 0 Agricultural: 0 Common: 140,000 PRINTED 07/30/2025 BY SYS