PT OF LOT 29 (S-6) &
PT OF LOT 33 IN SEC 43
IN OR 1945/1964

KATO AARON & DONNA GAYLE
87672 ROSES BLUFF RD
YULEE, FL 32097

2025

42-3N-28-5080-0029-0060

BUILDING CHARACTERISTICS

ELEMENT	CD	CONSTRUCTION
Exterior Wall	31	HARDIE BRD 100
Roof Structur	03	GABLE/HIP 100
Roof Cover	13	STAND SEAM 100
Interior Wall	05	DRYWALL 100
Interior Floo	13	LVT/LAMNT 90
Interior Floo	11	CLAY TILE 10
Air Condition	03	CENTRAL 100
Heating Type	04	AIR DUCTED 100
Bedrooms		3 100
Bathrooms		3.5 100
Frame	03	MASONRY 100
Stories	1.	1. 100
Units		0 100
Occupancy	00	NONE 100
Quality	03	Quality Level 03
DOR CODE	0100	SINGLE FAMILY
MAP NUM		MKT AREA 04
NEIGHBORHOOD/LOC	4031.00	

AREA TYPE	TOTAL GROSS AREA	PCT OF BASE	YEAR	TOT ADJ AREA	SUBAREA MARKET VALUE
BAL	20	15	2016	3	513
BAS	3,634	100	2016	3,634	621,652
FDG	726	60	2016	436	74,585
FOP	860	30	2016	258	44,135
FOP	1,195	30	2016	358	61,242
FUS	400	100	2016	400	68,426
SFB	96	80	2016	77	13,172
STR	30	10	2016	3	513
STR	50	10	2016	5	855
UDG	280	55	2016	154	26,345
TOTALS	7,291			5,328	911,438

MARKET ADJUSTMENTS

TYPE	MDL	EFF. AREA	TOT ADJ PTS	EFF. BASE RATE	REPL. COST NEW	AYB	EYB	ECON	FNCT		NORM	% COND
0500	01	5,328	112.1950	177.27	944,495	2016	2016	0	0	0	3.50	96.50

1 SFR CUST – 100% - 2017 Heated Area: 4111 HX Base Yr 2017

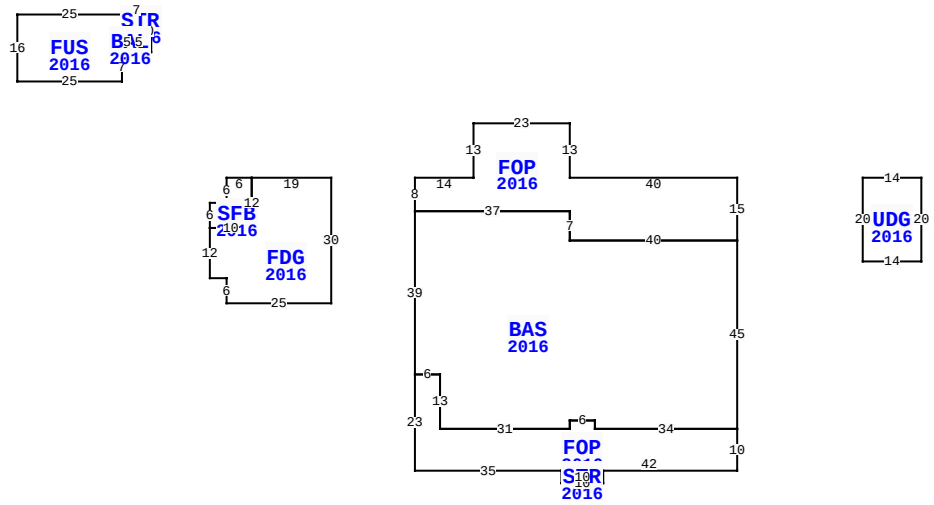

87672 ROSES BLUFF RD, YULEE

BLD DATE		LGL DATE	
XF DATE		LAND DATE	04/11/2025 MLU
INC DATE		AG DATE	

NASSAU COUNTY PROPERTY

PAGE 1 of 1 4

VALUATION SUMMARY

VALUATION BY		STANDARD
Tax Group: 4	Tax Dist:	
BUILDING MARKET VALUE		911,438
TOTAL MARKET OB/XF VALUE		51,074
TOTAL LAND VALUE - MARKET		297,160
TOTAL MARKET VALUE		1,259,672
SOH/AGL Deduction		553,991
ASSESSED VALUE		705,681
TOTAL EXEMPTION VALUE	HX HB	50,722
BASE TAXABLE VALUE		654,959
TOTAL JUST VALUE		1,259,672
NCON VALUE		0
INCOME VALUE		
PREVIOUS YEAR MKT VALUE		1,164,983

PERMIT NUM	DESCRIPTION	AMT	ISSUED
B1530538	CO ISSUED	0	06/22/2016
B1530538	NEW CONSTR	458,646	06/01/2015
B1530539	POLEBARN	30,338	06/01/2015
B1530540	GARAGE	71,579	06/01/2015

SALES DATA

OFF RECORD Number	DATE	TYPE INST	Q / U	V / I	RSN CD	SALE PRICE
1945/1964	10/27/2014	WD	Q	V	01	120,000
GRANTOR: RICHARDS JEREMY E & V						
GRANTEE: KATO AARON & DONNA						
1903/0489	2/14/2014	WD	Q	I	01	100,000
GRANTOR: HOLMBERG EDWARD L & L						
GRANTEE: RICHARDS JEREMY E &						

BUILDING NOTES

BUILDING DIMENSIONS

FOP=[YR=2016] W40 N13 W23 S13 W14 S8 BAS=[YR=2016] S39
FOP=[YR=2016] S23 E35 STR=[YR=2016] S3 E10 N3 W10$ E42 N10
W34 N2 W6 S2 W31 N13 W6$ E6 S13 E31 N2 E6 S2 E34 N45 W40 N7
W37$ E37 S7 E40 N15 $ PTR= W97 FDG=[YR=2016] W19
SFB=[YR=2016] W6 S6 W4 S6 E10 N12$ S12 W10 S12 E4 S6 E25
N30$ E97 $ PTR= W140 N40 STR=[YR=2016] W7 S1 FUS=[YR=2016]
W25 S16 E25 N7 BAL=[YR=2016] E4 N5 W4 S5$ N9$ S4 E4 S5 E3
N10$ S40 E140$ PTR= E30 UDG=[YR=2016] S20 E14 N20 W14$ W30$.

EXTRA FEATURES

LN	OB/XF CODE	DESCRIPTION	BLD	CAP	L	W	UNITS	UT	Adj R	ADJ UNIT PRICE	ORIG COND	YEAR ON	YEAR ACTUAL	Q	% COND	OB/XF MKT VALUE	NOTES
1	0812	CONCRETE C	0	100	0	0	8,892.00	SF	4.00	4.00	100	2016	2016	3	95	33,790	
2	0812	CONCRETE C	0	100	0	0	1,568.00	SF	4.00	4.00	100	2016	2016	3	95	5,958	
3	0351	CARPORT MT	0	100	44	22	968.00	SF	10.00	10.00	100	2021	2021	3	90	8,712	
4	0812	CONCRETE C	0	100	30	22	660.00	SF	4.00	4.00	100	2021	2021	3	99	2,614	

LAND DESCRIPTION

TOTAL OB/XF 51,074

LN	USE CODE	CLS	LAND USE DESCRIPTION	CAP	RD	LOC ZONE	FRONT	DEPTH	TOT LND UTS	UNIT TYPE	DT	DPTH FACT	% COND	TOT ADJ	UNIT PRICE	ADJ UNIT PRICE	LAND VALUE	OTHER ADJUSTMENTS AND NOTES	YEAR	DENSITY	DECL	FRZ	YR	CONSRV
1	000100	C	RES	100		OR	0.00	0.00	4.37	AC		1.00	1.00	0.80	85,000.00	68,000.00	297,160							

REVIEW DATE 09/20/2021 BY KWA Total Acres: 4.37 Total Land Value: 297,160 Market: 0 Agricultural: 0 Common: 297,160 PRINTED 07/30/2025 BY SYS