LOT 38
VILLAGES OF WOODBRIDGE PHASE 5
OR 2554/1700

BROWN RAMONA ANN
95424 CORSICA CT
FERNANDINA BEACH, FL 32034

2025

42-2N-28-1142-0038-0000

BUILDING CHARACTERISTICS

ELEMENT	CD	CONSTRUCTION
Exterior Wall	31	HARDIE BRD 100
Roof Structur	03	GABLE/HIP 100
Roof Cover	03	COMP SHNGL 100
Interior Wall	05	DRYWALL 100
Interior Floo	13	LVT/LAMNT 50
Interior Floo	14	CARPET 50
Air Condition	03	CENTRAL 100
Heating Type	04	AIR DUCTED 100
Bedrooms		4 100
Bathrooms		2 100
Frame	02	WOOD FRAME 100
Stories	1.	1. 100
Units		0 100
Quality	05	Quality Level 05
DOR CODE	0100	SINGLE FAMILY
MAP NUM		MKT AREA 04
NEIGHBORHOOD/LOC	4068.200	

AREA TYPE	TOTAL GROSS AREA	PCT OF BASE	YEAR	TOT ADJ AREA	SUBAREA MARKET VALUE
BAS	1,816	100	2024	1,816	215,341
FGR	661	55	2024	364	43,163
FOP	24	30	2024	7	830
FOP	224	30	2024	67	7,945
TOTALS	2,725			2,254	267,279

MARKET ADJUSTMENTS

TYPE	MDL	EFF. AREA	TOT ADJ PTS	EFF. BASE RATE	REPL. COST NEW	AYB	EYB	ECON	FNCT		NORM	% COND
0100	01	2,254	118.5800	118.58	267,279	2023	2023	0	0	0	0.00	100.00

1 SINGLE FAM – 0% - 2025 Heated Area: 1816 HX Base Yr

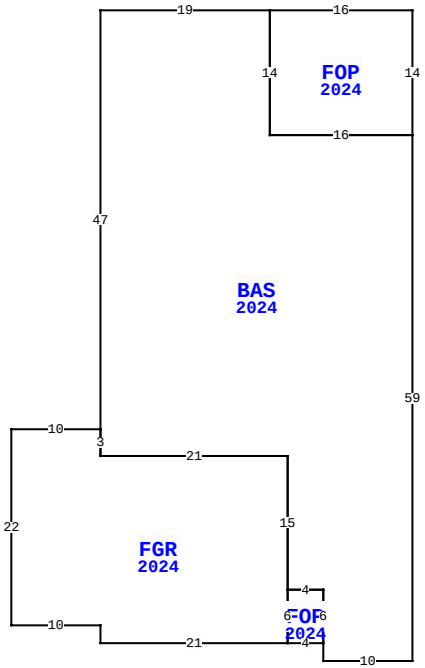

95424 CORSICA CT, FERNANDINA BEACH

BLD DATE		LGL DATE	
XF DATE		LAND DATE	04/25/2025 MLU
INC DATE		AG DATE	

NASSAU COUNTY PROPERTY

PAGE 1 of 1 4

VALUATION SUMMARY

VALUATION BY	STANDARD
Tax Group: 4	Tax Dist:
BUILDING MARKET VALUE	267,279
TOTAL MARKET OB/XF VALUE	4,118
TOTAL LAND VALUE - MARKET	85,000
TOTAL MARKET VALUE	356,397
SOH/AGL Deduction	0
ASSESSED VALUE	356,397
TOTAL EXEMPTION VALUE	0
BASE TAXABLE VALUE	356,397
TOTAL JUST VALUE	356,397
NCON VALUE	0
INCOME VALUE	
PREVIOUS YEAR MKT VALUE	333,031

PERMIT NUM	DESCRIPTION	AMT	ISSUED
22016346	NEW CONSTR	302,203	10/31/2022
220008192			

SALES DATA

OFF RECORD Number	DATE	TYPE INST	Q / U	V / I	RSN CD	SALE PRICE
2691/181	1/23/2024	SW	Q	I	01	420,000
GRANTOR: RICHMOND AMERICAN HOM						
GRANTEE: BROWN RAMONA ANN						
2598/0618	10/20/2022	SW	Q	V	05	728,400
GRANTOR: WOODBRIDGE NASSAU LLC						
GRANTEE: RICHMOND AMERICAN H						

BUILDING NOTES

BUILDING DIMENSIONS

BAS=[YR=2024;ORIG=80,10] W16 N14 W19 S47 S3 E21 S15 E4 S6 S2 E10 N59 $
FOP=[YR=2024;ORIG=64,-4] E16 S14 W16 N14 $
FGR=[YR=2024;ORIG=45,46] E21 S15 S6 W21 N2 W10 N22 E10 S3 $
FOP=[YR=2024;ORIG=66,61] E4 S6 W4 N6 $
.

EXTRA FEATURES

LN	OB/XF CODE	DESCRIPTION	BLD	CAP	L	W	UNITS	UT	Adj R	ADJ UNIT PRICE	ORIG COND	YEAR ON	YEAR ACTUAL	Q	% COND	OB/XF MKT VALUE	NOTES
1	0811	CONCRETE B	0	0	0	0	792.00	SF	5.20	5.20	100	2024	2023		100	4,118	

LAND DESCRIPTION

TOTAL OB/XF 4,118

LN	USE CODE	CLS	LAND USE DESCRIPTION	CAP	RD	LOC ZONE	FRONT	DEPTH	TOT LND UTS	UNIT TYPE	DT	DPTH FACT	% COND	TOT ADJ	UNIT PRICE	ADJ UNIT PRICE	LAND VALUE	OTHER ADJUSTMENTS AND NOTES	YEAR	DENSITY	DECL	FRZ	YR	CONSRV
1	000134	C	RES POND	0		PUD	0.00	0.00	1.00	LT		1.00	1.00	1.00	85,000.00	85,000.00	85,000							

REVIEW DATE 11/27/2023 BY DJ Total Acres: 0.00 Total Land Value: 85,000 Market: 0 Agricultural: 0 Common: 85,000 PRINTED 07/30/2025 BY SYS