BLOCK 2 LOT 50
IN OR 539 PG 261
R788161 & R788162 & R788163

PARSLEY JOYCE F
85209 KIRKLAND ROAD
YULEE, FL 32097

**2025**

**42-2N-27-4612-0002-0500**

## NASSAU COUNTY PROPERTY



## BUILDING CHARACTERISTICS

| ELEMENT | CD | CONSTRUCTION |
|---|---|---|
| Exterior Wall | 05 | AVERAGE 100 |
| Roof Structur | 03 | GABLE/HIP 100 |
| Roof Cover | 03 | COMP SHNGL 100 |
| Interior Wall | 05 | DRYWALL 100 |
| Interior Floo | 14 | CARPET 80 |
| Interior Floo | 08 | SHT VINYL 20 |
| Air Condition | 03 | CENTRAL 100 |
| Heating Type | 04 | AIR DUCTED 100 |
| Bedrooms | | 3 100 |
| Bathrooms | | 2 100 |
| Frame | 02 | WOOD FRAME 100 |
| Stories | 1. | 1. 100 |
| Units | | 0 100 |
| Quality | 03 | Quality Level 03 |
| DOR CODE | 0200 | MOBILE HOME |
| MAP NUM | | MKT AREA 04 |
| NEIGHBORHOOD/LOC | 4048.00 | |

| AREA TYPE | TOTAL GROSS AREA | PCT OF BASE | YEAR | TOT ADJ AREA | SUBAREA MARKET VALUE |
|---|---|---|---|---|---|
| BAS | 1,875 | 100 | 1999 | 1,875 | 78,451 |
| FOP | 250 | 30 | 1999 | 75 | 3,138 |
| FST | 168 | 65 | 2003 | 109 | 4,561 |
| STP | 36 | 10 | 2003 | 4 | 167 |
| UGR | 1,080 | 45 | 2003 | 486 | 20,334 |
| TOTALS | 3,409 | | | 2,549 | 106,651 |

## MARKET ADJUSTMENTS

| TYPE | MDL | EFF. AREA | TOT ADJ PTS | EFF. BASE RATE | REPL. COST NEW | AYB | EYB | ECON | FNCT | | NORM | % COND |
|---|---|---|---|---|---|---|---|---|---|---|---|---|
| 0800 | 02 | 2,549 | 117.2000 | 99.62 | 253,931 | 1999 | 1999 | 0 | 0 | 0 | 58.00 | 42.00 |

1 M/H 94+ – 100% - 0 Heated Area: 1875 HX Base Yr

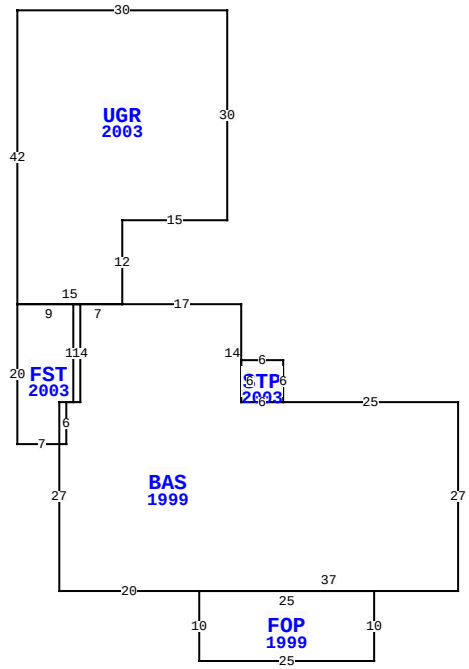


85209 KIRKLAND RD, YULEE

| | | | |
|---|---|---|---|
| BLD DATE | | LGL DATE | |
| XF DATE | | LAND DATE | 05/09/2025 MLU |
| INC DATE | | AG DATE | |

## VALUATION SUMMARY

| | | |
|---|---|---|
| VALUATION BY | | STANDARD |
| Tax Group: 4 | Tax Dist: | |
| BUILDING MARKET VALUE | | 106,651 |
| TOTAL MARKET OB/XF VALUE | | 2,800 |
| TOTAL LAND VALUE - MARKET | | 85,000 |
| TOTAL MARKET VALUE | | 194,451 |
| SOH/AGL Deduction | | 101,759 |
| ASSESSED VALUE | | 92,692 |
| TOTAL EXEMPTION VALUE | HX HB | 50,722 |
| BASE TAXABLE VALUE | | 41,970 |
| TOTAL JUST VALUE | | 194,451 |
| NCON VALUE | | 0 |
| INCOME VALUE | | |
| PREVIOUS YEAR MKT VALUE | | 181,420 |

| PERMIT NUM | DESCRIPTION | AMT | ISSUED |
|---|---|---|---|
| B0311800 | XFOB | 11,517 | 10/01/2003 |
| MH982215 | MH MOVE-ON | 0 | 03/01/1998 |
| 7618 | MH MOVE-ON | 9,000 | 01/03/1989 |

## SALES DATA

| OFF RECORD Number | DATE | TYPE INST | Q U | V I | RSN CD | SALE PRICE |
|---|---|---|---|---|---|---|
| 0539/0261 | 3/22/1988 | WD | Q | V | | 20,000 |

GRANTOR: SHEFFIELD & LEE
GRANTEE: PARSLEY JOYCE F

## BUILDING NOTES

## BUILDING DIMENSIONS

BAS=[YR=1999] W25 STP=[YR=2003] N6 W6 S6 E6$ W6 N14 W17 UGR=[YR=2003] N12 E15 N30 W30 S42 FST=[YR=2003] S20 E7 N6 E2 N14 W9$ E15$ W7 S14 W2 S27 E20 FOP=[YR=1999] S10 E25 N10 W25$ E37 N27$ .

## EXTRA FEATURES

| LN | OB/XF CODE | DESCRIPTION | BLD | CAP | L | W | UNITS | UT | Adj R | ADJ UNIT PRICE | ORIG COND | YEAR ON | YEAR ACTUAL | Q | % COND | OB/XF MKT VALUE | NOTES |
|---|---|---|---|---|---|---|---|---|---|---|---|---|---|---|---|---|---|
| 1 | 0500 | FP-PRE FAB | 0 | 100 | 0 | 0 | 1.00 | UT | 3,500.00 | 3,500.00 | 100 | 1998 | 1998 | 3 | 80 | 2,800 | |

## LAND DESCRIPTION

TOTAL OB/XF 2,800

| LN | USE CODE | CLS | LAND USE DESCRIPTION | CAP | RD | LOC ZONE | FRONT | DEPTH | TOT LND UTS | UNIT TYPE | DT | DPTH FACT | % COND | TOT ADJ | UNIT PRICE | ADJ UNIT PRICE | LAND VALUE | OTHER ADJUSTMENTS AND NOTES | YEAR | DENSITY | DECL | FRZ | YR | CONSRV |
|---|---|---|---|---|---|---|---|---|---|---|---|---|---|---|---|---|---|---|---|---|---|---|---|---|
| 1 | 000100 | C | RES | 100 | | OR | 0.00 | 0.00 | 1.00 | LT | | 1.00 | 1.00 | 1.00 | 85,000.00 | 85,000.00 | 85,000 | | | | | | | |

REVIEW DATE 05/12/2019 BY KBA Total Acres: 0.00 Total Land Value: 85,000 Market: 0 Agricultural: 0 Common: 85,000 PRINTED 07/30/2025 BY SYS