W295 FT OF LOT 11
IN OR 2297/481
YULEE SOUTH PB 5/224

AACTION RECYCLING CORPORATION/
971 BAKER AVE
JACKSONVILLE, FL 32209

2025

42-2N-27-4607-0011-0010

NASSAU COUNTY PROPERTY

BUILDING CHARACTERISTICS

ELEMENT	CD	CONSTRUCTION
Exterior Wall	25	MOD METAL 100
Roof Structur	10	STEEL FRME 100
Roof Cover	12	MODULAR MT 100
Interior Wall	02	WALL BD/WD 50
Interior Wall	07	NONE 50
Interior Floo	03	CONC FINSH 100
Ceiling	02	F.NOT SUS 100
Air Condition	03	CENTRAL 100
Heating Type	04	AIR DUCTED 100
Plumbing		8 100
Frame	05	STEEL 100
Story Height		16 100
RMS		6 100
Stories	1.	1. 100
Class	00	. 100
Units		0 100
Occupancy	OO	OWNER OCC 100
Quality	06	Quality Level 06

DOR CODE 4100 LIGHT MANUFACTURE
MAP NUM | MKT AREA 04
NEIGHBORHOOD/LOC 4051.00

AREA TYPE	TOTAL GROSS AREA	PCT OF BASE	YEAR	TOT ADJ AREA	SUBAREA MARKET VALUE
AOF	437	185	1999	808	76,598
AOF	742	185	1999	1,373	130,161
BAS	2,725	100	1999	2,725	258,330
BAS	573	100	2000	573	54,321
CAN	1,560	30	1999	468	44,366
STR	80	10	1999	8	758
TOTALS	6,117			5,955	564,534

MARKET ADJUSTMENTS

TYPE	MDL	EFF. AREA	TOT ADJ PTS	EFF. BASE RATE	REPL. COST NEW	AYB	EYB	ECON	FNCT		NORM	% COND
4101	06	5,955	182.0312	98.75	588,056	1999	2005	0	0	0	4.00	96.00

1 LGHT MANUF – 0% - 0 Heated Area: 4477 HX Base Yr

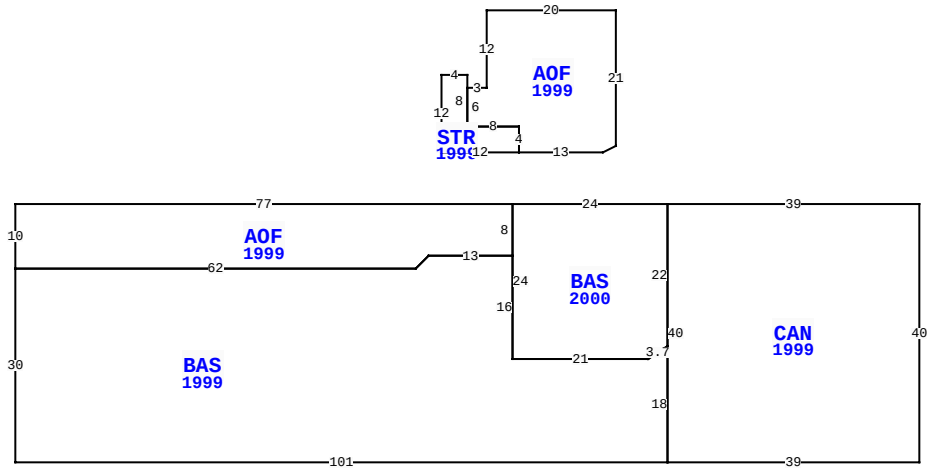

85011 DEONAS WAY, YULEE

BLD DATE	09/03/2020	KK	LGL DATE	
XF DATE	09/03/2020	KK	LAND DATE	09/03/2020 KK
INC DATE			AG DATE	

NASSAU COUNTY PROPERTY — VALUATION SUMMARY

VALUATION BY	STANDARD
Tax Group: 4	Tax Dist:
BUILDING MARKET VALUE	564,534
TOTAL MARKET OB/XF VALUE	13,803
TOTAL LAND VALUE - MARKET	77,438
TOTAL MARKET VALUE	655,775
SOH/AGL Deduction	109,589
ASSESSED VALUE	546,186
TOTAL EXEMPTION VALUE	0
BASE TAXABLE VALUE	546,186
TOTAL JUST VALUE	655,775
NCON VALUE	0
INCOME VALUE	
PREVIOUS YEAR MKT VALUE	661,616

PERMIT NUM	DESCRIPTION	AMT	ISSUED
B996322	NEW CONSTR	258,320	08/01/1999
996300	FOUNDATION	12,100	07/01/1999

SALES DATA

OFF RECORD Number	DATE	TYPE INST	Q U	V I	RSN CD	SALE PRICE
2297/0481	8/13/2019	SW	Q	I	05	605,000
GRANTOR: MANNING MARK V & CARL						
GRANTEE: AACTION RECYCLING C						
1748/0629	7/25/2011	WD	U	I	11	275,000
GRANTOR: SYNOVUS BANK						
GRANTEE: MANNING MARK V & CA						

BUILDING NOTES

BUILDING DIMENSIONS

BAS=[YR=1999;ORIG=-140,10] S30 E101 N18 D2L3 W21 N16 W13 D2L2 W62 $
CAN=[YR=1999;ORIG=0,0] W39 S40 E39 N40 $
AOF=[YR=1999;ORIG=-63,0] W77 S10 E62 U2R2 E13 N8 $
BAS=[YR=2000;ORIG=-39,0] W24 S24 E21 U2R3 N22 $
AOF=[YR=1999;ORIG=-62,-8] E13 U1R2 N21 W20 S12 W3 S6 E8 S4 $
STR=[YR=1999;ORIG=-70,-20] W4 S12 E12 N4 W8 N8 $
.

EXTRA FEATURES

LN	OB/XF CODE	DESCRIPTION	BLD	CAP	L	W	UNITS	UT	Adj R	ADJ UNIT PRICE	ORIG COND	YEAR ON	YEAR ACTUAL	Q	% COND	OB/XF MKT VALUE	NOTES
1	6001	ROLLUP DR	0	0	0	0	2.00	UT	400.00	400.00	100	1999	1999	3	20	160	
2	0803	ASPHALT C	0	0	0	0	3,564.00	SF	2.00	2.00	100	1999	1999	3	50	3,564	
3	0810	CONCRETE A	0	0	0	0	273.00	SF	6.50	6.50	100	1999	1999	3	75	1,331	
4	0467	FNC GT 25'	0	0	0	0	1.00	UT	875.00	875.00	100	1999	1999	3	45	394	
5	0466	FNC GT 20'	0	0	0	0	1.00	UT	750.00	750.00	100	1999	1999	3	45	338	
6	0430	CL FNC 6B	0	0	0	0	631.00	LF	9.70	9.70	100	1999	1999	3	45	2,754	
7	0465	FNC GT 15'	0	0	0	0	1.00	UT	450.00	450.00	100	1999	1999	3	45	203	
8	0978	SECURTY LT	0	0	0	0	16.00	UT	450.00	450.00	100	1999	1999	3	45	3,240	
9	0972	ST LGHT UN	0	0	0	0	1.00	UT	2,530.00	2,530.00	100	1999	1999	3	45	1,139	
10	0443	STK FNC 6'	0	0	0	0	136.00	LF	10.00	10.00	100	2012	2012	3	50	680	

TOTAL OB/XF 13,803

LAND DESCRIPTION

LN	USE CODE	CLS	LAND USE DESCRIPTION	CAP	RD	LOC ZONE	FRONT	DEPTH	TOT LND UTS	UNIT TYPE	DT	DPTH FACT	% COND	TOT ADJ	UNIT PRICE	ADJ UNIT PRICE	LAND VALUE	OTHER ADJUSTMENTS AND NOTES	YEAR	DENSITY	DECL	FRZ	YR	CONSRV
1	004100	C	LIGHT MFG.	0	0004	IW	0.00	0.00	44,250.00	SF		1.00	1.00	1.00	1.75	1.75	77,438							

REVIEW DATE 09/03/2020 BY KK Total Acres: 0.00 Total Land Value: 77,438 Market: 0 Agricultural: 0 Common: 77,438 PRINTED 07/30/2025 BY SYS