S150 FT OF W300 FT OF LOT 1
OF YULEE FARMS UNIT 4 PBK 3/32
& N1/2 LOT 9 OF SUB OF

SET FREE NASSAU INC/
P O BOX 516
YULEE, FL 32041

2025

42-2N-27-4600-0001-0020

NASSAU COUNTY PROPERTY

BUILDING CHARACTERISTICS

ELEMENT	CD	CONSTRUCTION
Exterior Wall	15	CONC BLOCK 50
Exterior Wall	17	CB STUCCO 50
Roof Structur	04	WOOD TRUSS 100
Roof Cover	03	COMP SHNGL 70
Roof Cover	02	ROLL COMP 30
Interior Wall	04	PLYWOOD 100
Interior Floo	14	CARPET 70
Interior Floo	07	CORK/VTILE 30
Air Condition	02	WINDOW 100
Heating Type	02	CONVECTION 100
Fixtures		35 100
Frame	03	MASONRY 100
Story Height		8 100
RMS		11 100
Units		11 100
BUD8 Adjustme	04	DIST 01 100
Occupancy	00	NONE 100
Quality	03	Quality Level 03
DOR CODE	7100	CHURCHES
MAP NUM		MKT AREA 04
NEIGHBORHOOD/LOC	4051.00	

AREA TYPE	TOTAL GROSS AREA	PCT OF BASE	YEAR	TOT ADJ AREA	SUBAREA MARKET VALUE
BAS	3,359	100	1993	3,359	61,987
CAN	1,088	30	1993	326	6,016
TOTALS	4,447			3,685	68,003

MARKET ADJUSTMENTS

TYPE	MDL	EFF. AREA	TOT ADJ PTS	EFF. BASE RATE	REPL. COST NEW	AYB	EYB	ECON	FNCT		NORM	% COND
3901	07	3,685	101.9597	92.27	340,015	1952	1952	0	0	0	80.00	20.00

1 MOTEL – 0% - 0 Heated Area: 3359 HX Base Yr

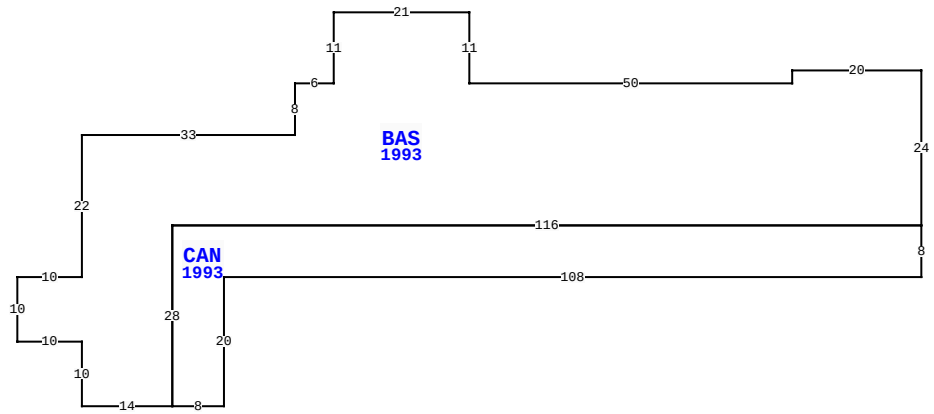

850482 US HWY 17, YULEE

BLD DATE	02/04/2020 KK	LGL DATE	
XF DATE		LAND DATE	03/18/2025 DC
INC DATE		AG DATE	

NASSAU COUNTY PROPERTY — VALUATION SUMMARY

VALUATION BY		STANDARD
Tax Group: 4	Tax Dist:	
BUILDING MARKET VALUE		113,299
TOTAL MARKET OB/XF VALUE		41,924
TOTAL LAND VALUE - MARKET		268,320
TOTAL MARKET VALUE		423,543
SOH/AGL Deduction		118,208
ASSESSED VALUE		305,335
TOTAL EXEMPTION VALUE	02	305,335
BASE TAXABLE VALUE		0
TOTAL JUST VALUE		423,543
NCON VALUE		0
INCOME VALUE		
PREVIOUS YEAR MKT VALUE		357,953

PERMIT NUM	DESCRIPTION	AMT	ISSUED
18003112	XFOB - SHED	27,532	06/26/2018
5768	REMODEL	3,300	05/30/1989

SALES DATA

OFF RECORD Number	DATE	TYPE INST	Q / U	V / I	RSN CD	SALE PRICE
1911/0580	3/31/2014	WD	U	I	37	50,000
GRANTOR: ROUTE 17S LLC						
GRANTEE: SET FREE NASSAU INC						
1770/1688	12/01/2011	WD	U	I	11	100
GRANTOR: WEATHERS J MICHAEL LI						
GRANTEE: ROUTE 17S LLC						

BUILDING NOTES

BUILDING DIMENSIONS

BAS=[YR=1993] W20 S2 W50 N11 W21 S11 W6 S8 W33 S22 W10 S10 E10 S10 E14 CAN=[YR=1993] E8 N20 E108 N8 W116 S28$ N28 E116 N24$.

EXTRA FEATURES

LN	OB/XF CODE	DESCRIPTION	BLD	CAP	L	W	UNITS	UT	Adj R	ADJ UNIT PRICE	ORIG COND	YEAR ON	YEAR ACTUAL	Q	% COND	OB/XF MKT VALUE	NOTES
1	0803	ASPHALT C	0	0	0	0	9,170.00	SF	2.00	2.00	100	1990	1990	3	50	9,170	
2	0402	CONC BUMPE	0	0	0	0	16.00	UT	25.00	25.00	100	1993	1993	3	72	288	
3	0971	ST LGHT OV	0	0	0	0	2.00	UT	1,555.00	1,555.00	100	1990	1990	3	27	840	
4	0940	SHEDS/PORT	0	0	8	8	64.00	SF	30.00	30.00	100	2009	2009	3	35	672	
5	0810	CONCRETE A	0	0	6	6	36.00	SF	6.50	6.50	100	1990	1990	3	57	133	
6	1123	CB 8"	0	0	50	2	100.00	SF	6.15	6.15	100	1970	1970	3	20	123	
7	0648	LIGHTS-AV	0	0	0	0	3.00	UT	140.00	140.00	100	2000	2000	3	20	84	
8	0446	BOX FNC 6'	0	0	0	0	24.00	LF	20.00	20.00	100	2012	2012	3	50	240	
9	0443	STK FNC 6'	0	0	0	0	7.00	LF	10.00	10.00	100	2005	2005	3	22	15	
10	0463	FENCE GATE	0	0	0	0	1.00	UT	300.00	300.00	100	2005	2005	3	64	192	

TOTAL OB/XF 11,757

LAND DESCRIPTION

LN	USE CODE	CLS	LAND USE DESCRIPTION	CAP	RD	LOC ZONE	FRONT	DEPTH	TOT LND UTS	UNIT TYPE	DT	DPTH FACT	% COND	TOT ADJ	UNIT PRICE	ADJ UNIT PRICE	LAND VALUE	OTHER ADJUSTMENTS AND NOTES	YEAR	DENSITY	DECL	FRZ	YR	CONSRV
1	007100	C	CHURCH	0	0004	CG	0.00	0.00	67,080.00	SF		1.00	1.00	1.00	4.00	4.00	268,320							

REVIEW DATE 02/04/2020 BY KK Total Acres: 1.54 Total Land Value: 268,320 Market: 0 Agricultural: 0 Common: 268,320 PRINTED 07/30/2025 BY SYS

S150 FT OF W300 FT OF LOT 1
OF YULEE FARMS UNIT 4 PBK 3/32
& N1/2 LOT 9 OF SUB OF

SET FREE NASSAU INC/
P O BOX 516
YULEE, FL 32041

2025

42-2N-27-4600-0001-0020

BUILDING CHARACTERISTICS

ELEMENT	CD	CONSTRUCTION
Exterior Wall	15	CONC BLOCK 100
Roof Structur	04	WOOD TRUSS 100
Roof Cover	12	MODULAR MT 100
Interior Wall	05	DRYWALL 100
Interior Floo	14	CARPET 80
Interior Floo	08	SHT VINYL 20
Air Condition	03	CENTRAL 100
Heating Type	04	AIR DUCTED 100
Fixtures		10 100
Frame	03	MASONRY 100
Story Height		8 100
RMS		8 100
Units		1 100
BUD8 Adjustme	04	DIST 01 100
Occupancy	00	NONE 100
Quality	03	Quality Level 03
DOR CODE	7100	CHURCHES
MAP NUM		MKT AREA 04
NEIGHBORHOOD/LOC	4051.00	

AREA TYPE	TOTAL GROSS AREA	PCT OF BASE	YEAR	TOT ADJ AREA	SUBAREA MARKET VALUE
APT	798	100	2008	798	15,460
BAS	1,370	100	1993	1,370	26,542
FEP	156	70	1993	109	2,112
FOP	60	20	1993	12	232
PTO	24	5	2008	1	19
UOP	240	20	2008	48	930
TOTALS	2,648			2,338	45,296

MARKET ADJUSTMENTS

TYPE	MDL	EFF. AREA	TOT ADJ PTS	EFF. BASE RATE	REPL. COST NEW	AYB	EYB	ECON	FNCT		NORM	% COND
3901	07	2,338	107.0370	96.87	226,482	1952	1952	0	0	0	80.00	20.00

2 MOTEL – 0% - 0 Heated Area: 2168 HX Base Yr

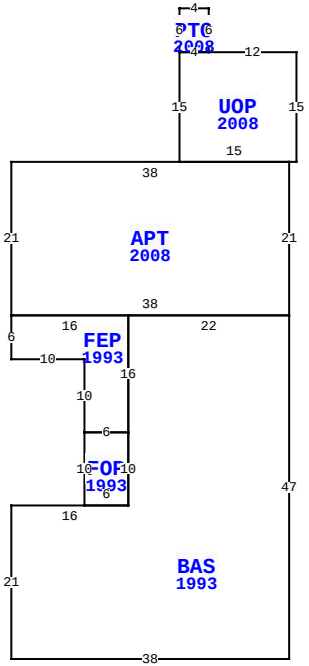

850482 US HWY 17, YULEE

BLD DATE	02/04/2020 KK	LGL DATE	
XF DATE		LAND DATE	03/18/2025 DC
INC DATE		AG DATE	

EXTRA FEATURES

LN	OB/XF CODE	DESCRIPTION	BLD	CAP	L	W	UNITS	UT	Adj R	ADJ UNIT PRICE	ORIG COND	YEAR ON	YEAR ACTUAL	Q	% COND	OB/XF MKT VALUE	NOTES
11	0802	ASPHALT B	0	0	38	20	760.00	SF	2.40	2.40	100	1990	1990	3	50	912	
12	0810	CONCRETE A	0	0	0	0	162.00	SF	6.50	6.50	100	2000	2000	3	77	811	
13	1242	WD DECK A	0	0	0	0	40.00	SF	10.00	10.00	100	2000	2000	3	20	80	
14	0421	CL FNC 3'	0	0	0	0	407.00	LF	4.00	4.00	100	1990	1990	3	26	423	
15	0463	FENCE GATE	0	0	0	0	1.00	UT	300.00	300.00	100	1990	1990	3	26	78	
16	0940	SHEDS/PORT	0	0	24	12	288.00	SF	30.00	30.00	100	1999	1999	3	20	1,728	
17	0402	CONC BUMPE	0	0	0	0	4.00	UT	25.00	25.00	100	2000	2000	3	83	83	
18	0971	ST LGHT OV	0	0	0	0	2.00	UT	1,555.00	1,555.00	100	2000	2000	3	48	1,493	
19	0510	GARAGE WD-	0	0	32	18	576.00	SF	35.00	35.00	100	2019	2019	3	87	17,539	
20	0940	SHEDS/PORT	0	0	30	12	360.00	SF	30.00	30.00	100	2015	2015	3	65	7,020	

TOTAL OB/XF 30,167

NASSAU COUNTY PROPERTY

VALUATION SUMMARY

VALUATION BY		STANDARD
Tax Group: 4	Tax Dist:	
BUILDING MARKET VALUE		113,299
TOTAL MARKET OB/XF VALUE		41,924
TOTAL LAND VALUE - MARKET		268,320
TOTAL MARKET VALUE		423,543
SOH/AGL Deduction		118,208
ASSESSED VALUE		305,335
TOTAL EXEMPTION VALUE	02	305,335
BASE TAXABLE VALUE		0
TOTAL JUST VALUE		423,543
NCON VALUE		0
INCOME VALUE		
PREVIOUS YEAR MKT VALUE		357,953

PERMIT NUM	DESCRIPTION	AMT	ISSUED

SALES DATA

OFF RECORD Number	DATE	TYPE INST	Q / U	V / I	RSN CD	SALE PRICE
1911/0580	3/31/2014	WD	U	I	37	50,000
GRANTOR: ROUTE 17S LLC						
GRANTEE: SET FREE NASSAU INC						
1770/1688	12/01/2011	WD	U	I	11	100
GRANTOR: WEATHERS J MICHAEL LI						
GRANTEE: ROUTE 17S LLC						

BUILDING NOTES

BUILDING DIMENSIONS

UOP=[YR=2008] W12PTO=[YR=2008] N6W4S6E4$W4
S15E15APT=[YR=2008] W38S21E38 BAS=[YR=1993] W22FEP=[YR=1993]
W16S6E10S10 E6N16$S16FOP=[YR=1993] W6S10E6N10$
S10W16S21E38N47$N21$E1N15$.

LAND DESCRIPTION

LN	USE CODE	CLS	LAND USE DESCRIPTION	CAP	RD	LOC ZONE	FRONT	DEPTH	TOT LND UTS	UNIT TYPE	DT	DPTH FACT	% COND	TOT ADJ	UNIT PRICE	ADJ UNIT PRICE	LAND VALUE	OTHER ADJUSTMENTS AND NOTES	YEAR	DENSITY	DECL	FRZ	YR	CONSRV

REVIEW DATE 02/04/2020 BY KK Total Acres: 1.54 Total Land Value: 268,320 Market: 0 Agricultural: 0 Common: 268,320 PRINTED 07/30/2025 BY SYS