LOT 43
HIDEAWAY PHASE 1C OR 2378/1584

MARTIN DAWN & MICHAEL
514 JEREMIAH DRIVE
TRUSSVILLE, AL 35173

**2025**

**42-2N-27-4374-0043-0000**

## BUILDING CHARACTERISTICS

| ELEMENT | CD | CONSTRUCTION |
|---|---|---|
| Exterior Wall | 31 | HARDIE BRD 100 |
| Roof Structur | 03 | GABLE/HIP 100 |
| Roof Cover | 03 | COMP SHNGL 100 |
| Interior Wall | 05 | DRYWALL 100 |
| Interior Floo | 13 | LVT/LAMNT 50 |
| Interior Floo | 14 | CARPET 50 |
| Air Condition | 03 | CENTRAL 100 |
| Heating Type | 04 | AIR DUCTED 100 |
| Bedrooms | | 4 100 |
| Bathrooms | | 2 100 |
| Frame | 02 | WOOD FRAME 100 |
| Stories | 2. | 2. 100 |
| Units | | 1 100 |
| Quality | 06 | Quality Level 06 |
| DOR CODE | 0100 | SINGLE FAMILY |
| MAP NUM | | MKT AREA 04 |
| NEIGHBORHOOD/LOC | 4071.00 | |

| AREA TYPE | TOTAL GROSS AREA | PCT OF BASE | YEAR | TOT ADJ AREA | SUBAREA MARKET VALUE |
|---|---|---|---|---|---|
| BAS | 358 | 100 | 2024 | 358 | 43,576 |
| BAS | 1,649 | 100 | 2024 | 1,649 | 200,716 |
| FGR | 432 | 55 | 2024 | 238 | 28,969 |
| FOP | 45 | 30 | 2024 | 14 | 1,704 |
| FOP | 130 | 30 | 2024 | 39 | 4,747 |
| FST | 15 | 55 | 2024 | 8 | 974 |
| STR | 44 | 10 | 2024 | 4 | 487 |
| TOTALS | 2,673 | | | 2,310 | 281,173 |

## MARKET ADJUSTMENTS

| TYPE | MDL | EFF. AREA | TOT ADJ PTS | EFF. BASE RATE | REPL. COST NEW | AYB | EYB | ECON | FNCT | | NORM | % COND |
|---|---|---|---|---|---|---|---|---|---|---|---|---|
| 0100 | 01 | 2,310 | 121.7160 | 121.72 | 281,173 | 2023 | 2023 | 0 | 0 | 0 | 0.00 | 100.00 |

1 SINGLE FAM – 0% - 2024 Heated Area: 2007 HX Base Yr

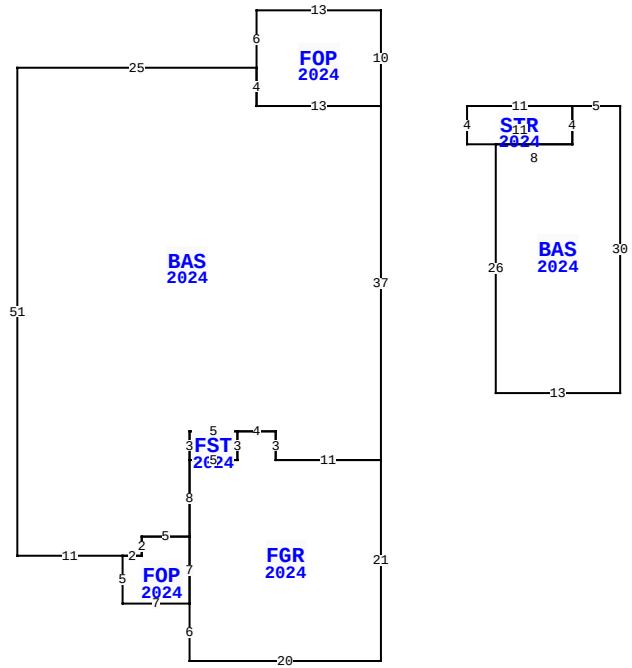


86453 MELODY LN, YULEE

| | | | |
|---|---|---|---|
| BLD DATE | | LGL DATE | |
| XF DATE | | LAND DATE | |
| INC DATE | | AG DATE | |

## NASSAU COUNTY PROPERTY

PAGE 1 of 1 4

### VALUATION SUMMARY

| | |
|---|---|
| VALUATION BY | STANDARD |
| Tax Group: 4 | Tax Dist: |
| BUILDING MARKET VALUE | 281,173 |
| TOTAL MARKET OB/XF VALUE | 3,848 |
| TOTAL LAND VALUE - MARKET | 50,000 |
| TOTAL MARKET VALUE | 335,021 |
| SOH/AGL Deduction | 0 |
| ASSESSED VALUE | 335,021 |
| TOTAL EXEMPTION VALUE | 0 |
| BASE TAXABLE VALUE | 335,021 |
| TOTAL JUST VALUE | 335,021 |
| NCON VALUE | 0 |
| INCOME VALUE | |
| PREVIOUS YEAR MKT VALUE | 320,953 |

| PERMIT NUM | DESCRIPTION | AMT | ISSUED |
|---|---|---|---|
| 230003535 | CO | | 03/16/2023 |
| 22014682 | NEW CONSTR | 325,668 | 09/27/2022 |

## SALES DATA

| OFF RECORD Number | DATE | TYPE INST | Q / U | V / I | RSN CD | SALE PRICE |
|---|---|---|---|---|---|---|
| 2676/1803 | 10/27/2023 | WD | Q | I | 01 | 400,000 |
| GRANTOR: SEDA CONSTRUCTION COM | | | | | | |
| GRANTEE: MARTIN DAWN & MICHA | | | | | | |
| 2618/1206 | 2/03/2023 | WD | U | V | 30 | 75,000 |
| GRANTOR: SEMANIK EQUITY DEVELO | | | | | | |
| GRANTEE: SEDA CONSTRUCTION C | | | | | | |

## BUILDING NOTES

## BUILDING DIMENSIONS

BAS=[YR=2024;ORIG=10,10] E25 S4 E13 S37 W11 N3 W4 W5 S3 S8 W5 S2 W2 W11 N51 $
FGR=[YR=2024;ORIG=48,51] W11 N3 W4 S3 W5 S8 S7 S6 E20 N21 $
FOP=[YR=2024;ORIG=48,14] W13 N4 N6 E13 S10 $
FOP=[YR=2024;ORIG=28,59] W5 S2 W2 S5 E7 N7 $
FST=[YR=2024;ORIG=28,48] E5 S3 W5 N3 $
BAS=[YR=2024;ORIG=68,18] N4 E5 S30 W13 N26 E8 $
STR=[YR=2024;ORIG=68,14] W11 S4 E11 N4 $
.

## EXTRA FEATURES

| LN | OB/XF CODE | DESCRIPTION | BLD | CAP | L | W | UNITS | UT | Adj R | ADJ UNIT PRICE | ORIG COND | YEAR ON | YEAR ACTUAL | Q | % COND | OB/XF MKT VALUE | NOTES |
|---|---|---|---|---|---|---|---|---|---|---|---|---|---|---|---|---|---|
| 1 | 0810 | CONCRETE A | 0 | 0 | 0 | 0 | 592.00 | SF | 6.50 | 6.50 | 100 | 2024 | 2023 | | 100 | 3,848 | |

## LAND DESCRIPTION

TOTAL OB/XF 3,848

| LN | USE CODE | CLS | LAND USE DESCRIPTION | CAP | RD | LOC ZONE | FRONT | DEPTH | TOT LND UTS | UNIT TYPE | DT | DPTH FACT | % COND | TOT ADJ | UNIT PRICE | ADJ UNIT PRICE | LAND VALUE | OTHER ADJUSTMENTS AND NOTES | YEAR | DENSITY | DECL | FRZ | YR | CONSRV |
|---|---|---|---|---|---|---|---|---|---|---|---|---|---|---|---|---|---|---|---|---|---|---|---|---|
| 1 | 000100 | C | RES | 0 | | PUD | 0.00 | 0.00 | 1.00 | LT | | 1.00 | 1.00 | 1.00 | 50,000.00 | 50,000.00 | 50,000 | | | | | | | |

REVIEW DATE 07/05/2023 BY NW Total Acres: 0.00 Total Land Value: 50,000 Market: 0 Agricultural: 0 Common: 50,000 PRINTED 07/30/2025 BY SYS